CONFIDENTIAL

MOBILE PHONE
SERVICE MANUAL

CAUTION
BEFORE SERVICING THE UNIT, READ THE “SAFETY PRECAUTIONS” IN THIS MANUAL

MODEL : LG-M320TV

Any reproduction, duplication, distribution (including by way of email, facsimile or other electronic means), publication, modification, copying or transmission of this Service Manual is STRICTLY PROHIBITED unless you have obtained the prior written consent of the LG Electronics entity from which you received this Service Manual. The material covered by this prohibition includes, without limitation, any text, graphics or logos in this Service Manual

Copyright ⓒ 2017 LG Electronics. Inc. All right reserved. Only training and service purposes

Date: March, 2017 / Issue 1.0

Table Of Contents

1. INTRODUCTION..... 3
1.1 Purpose
1.2 Regulatory Information

2. PERFORMANCE..... 4
2.1 Band Specification
2.2 HW Features
2.3 RSSI Display
2.4 Current consumption
2.5 Battery bar
2.6 SW Specification

3. TROUBLE SHOOTING.....18
3.1 Checking XO Block
3.2 MT6176 RFIC (U15000) Circuit
3.4 FEMiD Block
3.4.1 GSM, WCDMA, LTE PART - PRx
3.4.2.1 WCDMA, LTE PART - Tx
3.4.2.2 GSM PART - Tx
3.4.3 GSM, WCDMA, LTE PART - DRX
3.5 BT/WIFI
3.6 GPS PART
3.7 FM PART
3.8 DTV PART
3.9 Power
3.10 Charger
3.11.1 Audio receiver
3.11.2 Audio speaker
3.11.3 Audio Main MIC
3.11.4 Audio_sub(2nd) MIC
3.11.5 Audio_Ear MIC Jack
3.12 Display
3.13.1 13M rear camera
3.13.2 5M front camera
3.14 Motor
3.15.1 Sensor – Proximity(case1)
3.15.1 Sensor – Proximity(case2)
3.15.2 Sensor – acceleration
3.15.2 Sensor – Geomagnetic
3.16 USB

4. BLOCK DIAGRAM..... 64

5. CIRCUIT DIAGRAM..... 73

6. BGA PIN MAP..... 93

7. PCB LAYOUT..... 95

8. HIDDEN MENU..... : 1

9. DOWNLOAD..... : 4

10. CALIBRATION.....: 5

11. DISASSEMBLE GUIDE..... : 6

12. EXPLODED VIEW..... : 9

13. REPLACEMENT PART LIST..... : :

Copyright © 2017 LG Electronics. Inc. All right reserved. Only training and service purposes

1.1 Purpose

This manual provides the information necessary to repair, calibration, description and download the features of this model.

1.2 Regulatory Information

A. Security

This material is prohibited to share and release to unauthorized person, in accordance with the regulations, LG Electronics, Civil / criminal responsibility in accordance with the relevant provisions violate.

B. Precautions for repair

- In case of Disassembly or Assembly to repair product, be careful of a product failure caused by RF signals and Static electricity.
- When using Magnetic tool for the Phone's SVC repair, you should check affect the Electric parts according to effect of Magnet.
- When fastening the screw, be careful not to damage the head of screw and even product.

C. Attention

Boards, which contain Electrostatic Sensitive Device (ESD), are indicated by the sign.

Following information is ESD handling:

- Service personal should ground themselves by using a wrist, strap when exchange system board.
- When repair are made to a system board, they should spread the floor with anti-static mat which is also grounded.
- Use a suitable, grounded soldering iron.
- Keep sensitive parts in these protective packages until these are used.
- When returning system board or parts like EEPROM to the Factory, use the protective package as described.

Copyright © 2017 LG Electronics. Inc. All right reserved. Only training and service purposes

2.1 Band Specification

Support Band	TX Freq (MHz)	RX Freq (MHz)
WCDMA(FDD1)	1920 – 1980	2110 – 2170
WCDMA(FDD2)	1850 – 1910	1930 – 1990
WCDMA(FDD5)	824 – 849	869 – 894
WCDMA(FDD8)	880 – 915	925 – 960
LTE(FDD3)	1710 – 1785	1805 – 1880
LTE(FDD7)	2500 – 2570	2620 – 2690
LTE(FDD28)	703 - 748	758 - 803
EGSM	880 - 915	925 – 960
GSM850	824 - 849	869 – 894
DCS1800	1710 - 1785	1805 – 1880
PCS	1850 - 1910	1930 - 1990

Copyright ⓒ 2017 LG Electronics. Inc. All right reserved. Only training and service purposes

2.2 HW Features

List	Type / Spec.	
1. Phone Type	DOP Type	
2. Size	154.7mm x 78.1mm x 8.49mm	
3. Weight	164 g (with Battery)	
4. Battery	**4,500mAh(Typ) (Li-Polymer)**, 4,400mAh(Min.)	
5.Chipset	MT6750 1.5GHz Octa core	
6. Memory	32GB(EMMC) + 2GB(LPDDR3) External Memory(SD Card) : Up to 2TB	
7. LCD	Size	5.5 inch
	Display Type	Active matrix TFT, Transmissive Type
	Color	16.7M colors
	Resolution	1280(H) X 720(V), 267ppi
8. Touch	Type	5.5 inch Capacitive type
9. Main Camera (13M)	Type	CMOS image sensor
	Resolution	4224(H) X 3192(V) pixels.
	Image Scaling Down	13M(4160x3120), 9.7M(4160x2340), 4.9M(2560x1920), 3.7M(2560x1440), 2.1M(1440x1440)
	Format	**Image :** JPG, **Video :** MP4

Copyright © 2017 LG Electronics. Inc. All right reserved. Only training and service purposes

2.2 HW Features

10. Audio	Receiver	12 X 06 X 2T Receiver
	Speaker	16 X 12 X 2.6T Speaker
	Format	MP3, AAC, MIDI, EAAC+, OGG, AMR
11. Bluetooth	Standard	Bluetooth 4.2
	Effective Distance	10M
	Distance	0 m ~ 10 m (depend on environment)
12. WLAN	Standard	IEEE 802.11 b/g/n
	Throughput	Max 40Mbps (SDIO Driver performance)
	Depend on environment	0 ~ 50m (depend on environment)
13. GPS	type	A-GPS
14. FM	type	FM Radio, 3.5pi Ear-jack

Copyright © 2017 LG Electronics. Inc. All right reserved. Only training and service purposes

2.3 RSSI Display

RSSI BAR	GSM	WCDMA	LTE	Comment
BAR 5->4	-91dBm ± 3	-86dBm ± 4	-85dBm ± 3	1. Call Connected & CPIPH Level=-3.3 2. LTE: RSRP
BAR 4->3	-96dBm ± 3	-91dBm ± 4	-95dBm ± 3	
BAR 3->2	-99dBm ± 3	-97dBm ± 4	-105dBm ± 3	
BAR 2->1	-103dBm ± 3	-101dBm ± 4	-115dBm ± 3	
BAR 1->0	-105dBm ± 3	-107dBm ± 4	-127dBm ± 3	

2.4 Current consumption

	Stand by		Voice Call (LTE Data connection)	Measurement Condition
	Bluetooth Off	Bluetooth Connected		
WCDMA Only	10 mA under (DRX=7)	13 mA under (DRX=7)	260 mA under (Tx=10dBm)	LCD off
GSM Only	10 mA under (PP=5)	13 mA under (PP=5)	390 mA under (Lvl=5)	LCD off
LTE	10 mA under (LTE 2.56S)	13 mA under (LTE 2.56s)	400 mA (@TX 10 dBm)	LCD off

Copyright © 2017 LG Electronics. Inc. All right reserved. Only training and service purposes

2.5 Battery bar

Battery Bar icon	Specification(%)
Level 20	98 ~ 100
Level 19	93 ~ 97
Level 18	88 ~ 92
Level 17	83 ~ 87
Level 16	78 ~ 82
Level 15	73 ~ 77
Level 14	68 ~ 72
Level 13	63 ~ 67
Level 12	58 ~ 62
Level 11	53 ~ 57
Level 10	48 ~ 52
Level 9	43 ~ 47
Level 8	38 ~ 42
Level 7	33 ~ 37
Level 6	28 ~ 32
Level 5	23 ~ 27
Level 4	16 ~ 22
Level 3	13 ~ 15
Level 2	8 ~ 12
Level 1	3 ~ 7
Level 0	0 ~ 2
Low Battery Pop-up	16% →15% : One Time popup (No call) There is no pop-up until 5% if you delete pop-up.
Critical Low battery pop-up	6% → 5% : One Time popup (No call) There is no pop-up until 3% if you delete pop-up.
Power off	2%-->1%

Copyright ⓒ 2017 LG Electronics. Inc. All right reserved. Only training and service purposes

2.6 SW Specification

Function	Detail Item	O / X	Specification	Etc.
OS	OS	O	Android N-OS	
Data	Circuit	X		
	Packet	O		
Connectivity	Infrared (IrDA)	X		
	Bluetooth	O	Ver. 4.2	
	Wi-Fi	O	802.11 b/g/n	
	USB	O	Ver. 2.0	
	USB Mass storage	X	MTP support	
	RS232	X		
	DLNA1.5	X		
Voice Function	Voice Recording	O		
	Voice Command	X	Digit Dial	
		X	Name Dial	
		X	Menu	
		X	Phonebook Searching	
	Answering machine	X	Driving, Meeting, user define(absent)	
Memory	User Memory	O	Total	32GB eMMC/ 2GB DDR + external MicroSD
		O	Total User Memory	23.35GB (TBD) (w/o MicroSD)
		O	MMS	
		O	Pictures (Still Image & Moving Image)	
		O	MP3 (Music Contents)	
		X	Java Contents	
		O	Wallpaper	
		O	Ringtone	
		O	external memory (microSD)	up to 2TB
Camera (Still Capture)	Memory	O	MicroSD	
	Camera Module	O	13M AF	
	Auto Focus	O	Still Mode AF	
	Digital Zoom	O	4x	
	Capture Resolution	O	Rear 4160*2336, 2560*1440, 4160*3120, 2560*1920, 3120*3120, 1440*1440 Front 2560x1920, 2560x1440, 1920x1920	
	Continuous Shot	O		
	Quality	X		
	Preview Image	O	960x720(Normal), 1280x720(Wide))	
	TV-Out	X		
	Flash	O	LED	

Copyright ⓒ 2017 LG Electronics. Inc. All right reserved. Only training and service purposes

2.6 SW Specification

Camera (Movie Capture)	Movie Resolution	O	Rear 1920x1080, 1280x720, 320x240, 176x144 Front 1920x1080, 1280x720, 320x240, 176x144	
	Filter	X		
	Quality	X		
	MPEG Visual Bit Rate	X		Default code H.264 And video Bit rate is 17Mbps We can support MPEG-4, but t he bit rate is depend on Applic ation setting
	Audio Encode	O	AAC, , AMR-NB	
	Audio Decode	O	AMR	
	Movie Recode	O	Recode, Stop, Pause, Resume	
	Movie Playback	O	Play, Stop, Pause	
	Stream Format (Mux)	O	mp4, 3gp	mp4 – normal 3gp – mms
	Stream Format (Demux)	O	mp4, 3gp	mp4 – normal 3gp – mms
	Recoding Time	O	Real Time Recoding	
	TV-Out	X		
Audio Multimedia	Voice Codec	O	AMR/ 3gpp	
	AAC /AAC+/ EAAC+	O		
	MP3, WAV	O		
	WMA	O		
	Midi	O	● Type 0 and 1 (.mid, .xmf, .mxmf) ● RTTTL/RTX (.rtttl, .rtx) ● OTA (.ota) ● iMelody (.imy)	
	Music ringtone	O	MP3, AAC, AAC+, eAAC+, AMR, OGG, FLAC , ALAC, PCM, WMA, OPUS	
	AMR-NB	O		
	Music player skin	O	Music Player	
	FM Radio	O		
	Speakerphone	O		

Copyright ⓒ 2017 LG Electronics. Inc. All right reserved. Only training and service purposes

2.6 SW Specification

Multimedia	MPEG4/H.263	O	MPEG4 - Decoding : 1080p/30fps/20Mbps H.263 - Decoding : 704*576/30fps/15Mbps	
	H.264	O	Decoding : 1080p/30fps/20Mbps	
	WMV	X		
	Normal View	O	Moving Image Capture & Movie Contents	contents size
	Wide View	O	Full Screen mode	
	Custom DTV Zoom	X		
Other Features	File Viewer	X		Android App can be downloaded in Play Store
	Macromedia Flash Lite	X	Not Available	
	e-Book/e-Comic Book	X	*.doc, *.jpg, *.gif	E-book reader program is not included in ROM. But user can download in internet..
	Flight Mode	O		
Internet Browser	WAP (Windows Mobile 6.0 IE Mobile)	X	version 2.0	
		X	WML1.3	
		O	XHTML1.1	
		O	HTML4.01	Partially support - HTML 5
Java	MIDP	X		
	J2ME support	X		
	Game & Contents	X		
	CLDC	X		
Flash	Flash Game	X		
Streaming Service	H.263+AAC/AMR-NB	O	H.263 - Decoding : 704*576/30fps/15Mbps	
	MPEG4+AAC/AMR-NB	O	MPEG4 - Decoding : 1080p/30fps/20Mbps	
	WMV9	X		
DRM	OMA DRM	O	Forward Lock	
		X	Separate Delivery	
		X	Combined Delivery - Count-only	
OTA	OTA	O	OTA 1.0	
Display	RSSI	O	6 level (Include No service)	
	Battery Level	O	with percentage	Yes
	RTC	O		
	Multi Language	O	depending on build language.	
	Quick Access Mode	X		
	PLMN/Service Indicator	O		
	Dimming Clock	X	15s, 30s, 1min, 2min, 5min 10min, 15min	Screen timeout supports

Copyright © 2017 LG Electronics. Inc. All right reserved. Only training and service purposes

2.6 SW Specification

Normal Features	Last Dialed Number	O		
	Last Received Number	O		
	Last Missed Number	O		
	Scratch Pad Memory	X		
Call Management Managemen	Call Waiting	O		
	Call Swap	O		
	Call Retrieve	O		
	Auto Answer	O		
	Automatic Redial	X		
	Calling Line Identification	O		
	Full Call divert	O		
	Speed Dialing	O		
	Last Number Redial	X		
	Multiparty Call (Conferenc e Call)	O		
	Explicit Call Transfer	O		
Network	Automatic Network Selecti on	O		
	Manual Network Selection	O		
	Network Service Status	O		
DTMF	DTMF Signaling	O		
	DTMF Enable & Disable	X		
Audio	Key Tone Volume	O	16 Level (Include Mute)	
	Ring Tone Volume	O	16 Level (Include Mute)	
	Ring Tone Pattern	O	ogg	
	Ring Type Silent	O	Vibrator & Ring (Indicator)	
	Earpiece Volume	O	16 Level (Include Mute)	
	Mute	O		
Cell Broadcast	Read Cell Broadcast	O		
	Cell Broadcast Categories	X		
	Cell Broadcast Message La nguage	O	Supports filtering with language IDs (Germa n,Italian,French, Spanish, Dutch,Swedish,Danish, Portuguese,Finnish,Norweggian, Greek,Turkish,Hungarian,Polish, Czech)	

Copyright © 2017 LG Electronics. Inc. All right reserved. Only training and service purposes

2.6 SW Specification

Phone Book	Entry	O	Name, Phone, Email, Groups, Postal addre ss, Ringtone, Notification Sound, Phonetic name, Organization, IM, Notes, Nickname, Website, Event	
	Field	O	Phone(Mobile,Work,Home,Main, Work Fax ,Home Fax,Pager, Other, Custom) Email(Home,Work,Other,Custom) Groups(Coworkers,Family,Friends) Postal address(Home,Work,Other,Custom) Organization(Company,Title) IM(AIM,Windows Live,Yahoo,Skype,QQ,Ha ngouts,ICQ,Jabber,Custom) Event(Birthday,Anniversary,Other, Custom)	
	Numeric Store and Recall	O		
	Alphabetic Store	O		
	Alphabetic Recall	X		
	Scroll by alphabetic or nu meric order	O		
	Last Number Dialed	O		
	Last Number Missed	O		
	Last Number Received	O		
	Copy & Move	X	Move not support	
	Fixed Dial Number	O		
	Barred Dial Number	X		
	Service Dial Number	X	It depends on SIM card	
	Email Entry	O		
	Picture ID	O	Relating Photo caller ID	
	My Name card	O	Bluetooth transmission (OPP	
Call Cost	Last Call Timer	X		
	Last Call Charge Units	X		
	Total Call Timer	X		
	Total Charge Units	X		
	Visible, Audible Call Time /Cost Indication	X		
Supp. Services	Call Forwarding	O	All Incoming Calls,	
		O	No Reply	

Copyright ⓒ 2017 LG Electronics. Inc. All right reserved. Only training and service purposes

2.6 SW Specification

SIM	Plug In Type	O		
	SIM Lock	O		
	SIM Toolkit	O		
	Prepaid SIM Operation	O		
Short Messaging	Read Message	O	EMS Not Support	
	Write and Edit Message	O		
	Send and Receive Message	O		
	Reply to Message	O		
	Forward Message	O		
	Extract Number from Message	O		
	Message Status	O		
	Message Unread Indicator	O		
	Settable Message Center Number,	O		
	Reply Path and Validity	X		
	Visible and Audible Message Receive Alerting	O		
	Voice Mail	O		
	Settable Voice Mail Center Number	X		
	Message Protocol	X		
	Message Overflow Indicator	O		
	Message Center Number	O		
	Help Menu	X		
Multimedia Messaging	Picture Attachable	O		Max bytes is it, According to inserted usim
	Moving Picture Attachable	O	Video MMS	Max bytes is it, According to inserted usim
	Voice Attachable	O	AMR	
	Help Menu	X		

Copyright © 2017 LG Electronics. Inc. All right reserved. Only training and service purposes

2.6 SW Specification

Instant Messaging Service	IM	X		Android App can be downloaded in Play Store
	PC Compatable	X		
	Menu Option	X		
E-Mail	Protocol	O	IMAP4	
		O	SMTP	
		O	POP3	
		X	Help Menu	
Voice Instant Messaging Service	PTT	X	Full Duplex	
		X	Half Duplex	
	Menu Option	X	Grouping	
		X	Status List	
		X	Help	
		X	Others	
Sound Contents	Wallpaper	X		
	Screen Saver	X		
	Ringtones	O		
	Karaoke	X		
	Stutter Sound	O		
	Flip tone	X		
	Button tone	O	can be enable or disable button press sound.	
	Others	X		
Calendar	New Event	O		
	Edit Event	O		
	Agenda	O		
	Reminder	O		
	Google sync	O		
Miscellaneous Function	Development & Test Facility	O		
	Field Test Facility	X		
	Display Software Version	O		
	IMEI	O	*#06#	
Text Input	Language	O		
	Predictive word input	O	T9 predictive supported.	
Scheduler	Schedule	O		
	To Do List	O		
	Memo	O		
	D-day counter	X		
	Send via Bluetooth	O		
World Time	Setting Local Time	O		
	Display Two Number of Cities Time	X		

Copyright ⓒ 2017 LG Electronics. Inc. All right reserved. Only training and service purposes

2.6 SW Specification

Unit converter		X		
Stop watch		O		
Calculator	Calculation	O		
PC Sync	Phone Book Sync	X	PC Bridge supports backup and restore (not sync)	
	Message Sync	x	PC Bridge supports backup and restore (not sync)	
	Multimedia Contents Sync	x	PC Bridge supports backup and restore (not sync)	
	Scheduler Sync	X	PC Bridge supports backup and restore (not sync)	
Sync ML	DS	X		
	DM	X		
Game		X	TBD	
Menu	Quick Access Mode (Profile)	O		
External Interface	Electrical Man Machine Interface	X		
	Development and Test Facility	X		
Handset	Restore Factory Setting	O		
	Read Software Version	O		
	Battery Charging Mode	O	USB/ TA Charging	USB/ TA Charging
Security	Emergency Call	O		
	Handset Lock	O		
	Security Code	O		
	SIM Lock	O		
	Key guard	X		
Real Time Clock	12/24 hour	O		
	Calendar	O		
	Time Zone	O		
	Alarm Manager	O		
	Dimming Clock	X	Battery power 15s, 30s, 1min, 2min, 5min, 10min, 15min External power 15s, 30s, 1min, 2min, 5min, 10min, 15min	Screen timeout supports
	Power-off Alarm	X		
	On Alarm Event	O	Display	

Copyright © 2017 LG Electronics. Inc. All right reserved. Only training and service purposes

3.1 Checking XO Block

The output frequency(26MHz) of XO(X15000) is used as the reference one of MT6176 and MT6353 internal VCO

Checking Flow

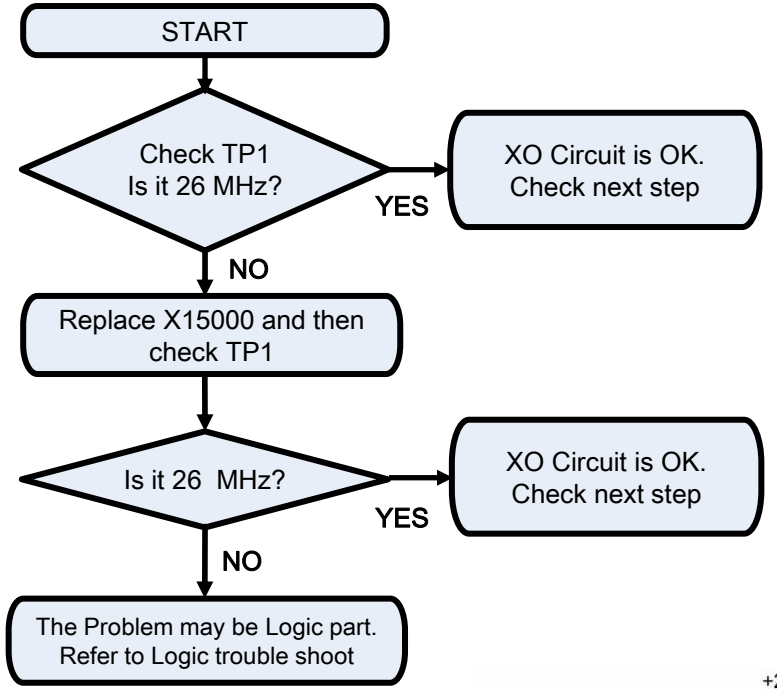

Image

BOT

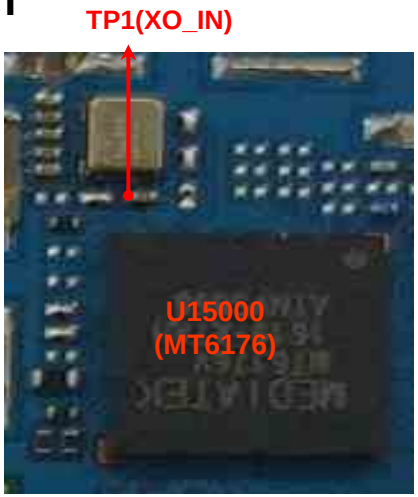

Circuit Diagram

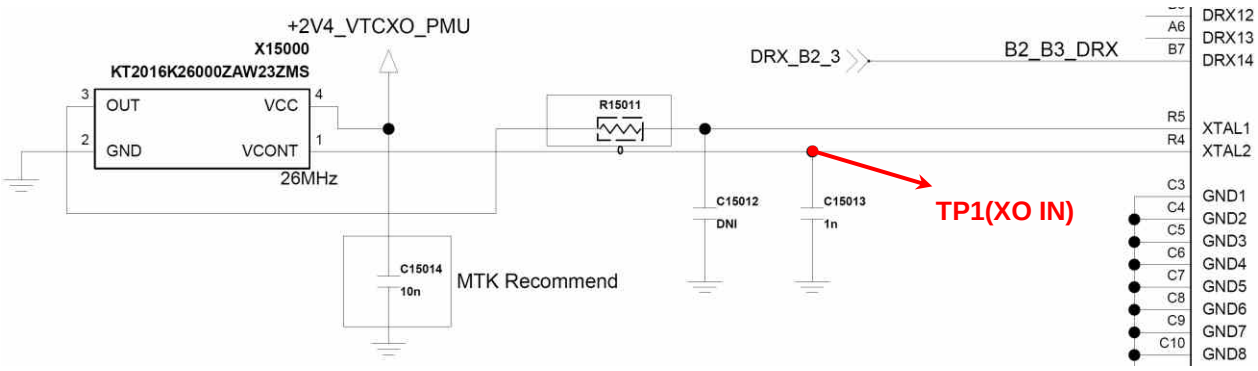

Copyright © 2017 LG Electronics. Inc. All right reserved. Only training and service purposes

3.2 MT6176 RFIC (U15000) Circuit

Checking MT6176 RFIC (U15000) Circuit

Checking Flow

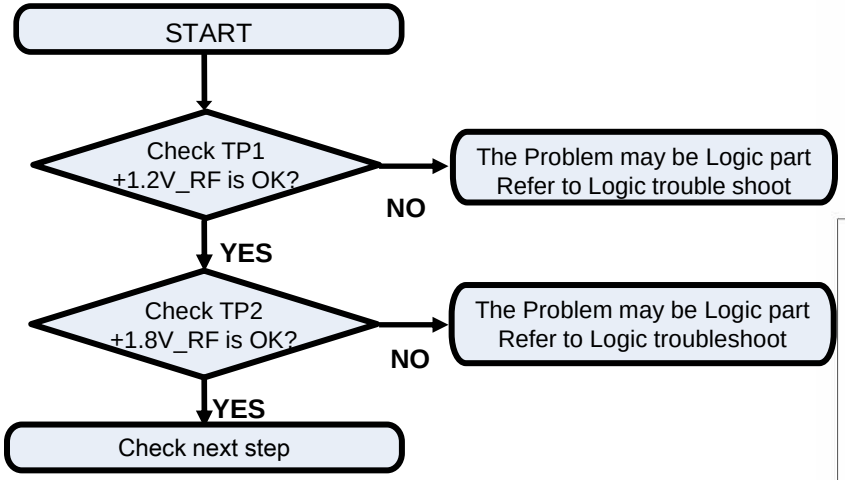

Image

BOT

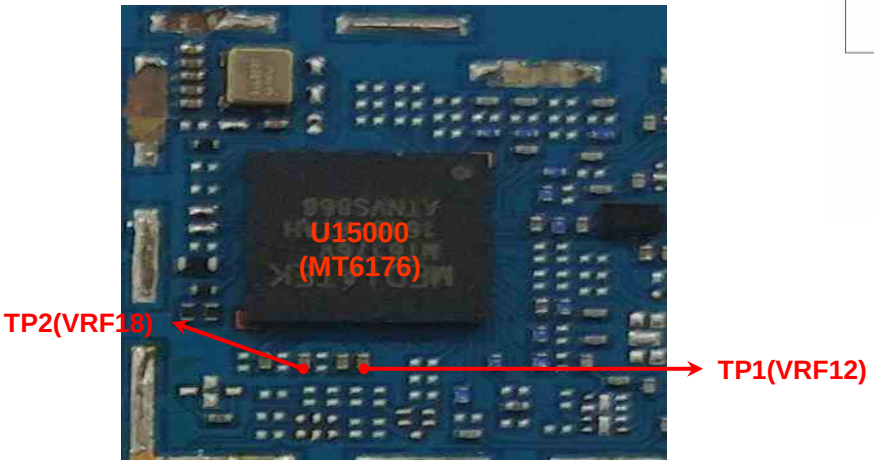

Circuit Diagram

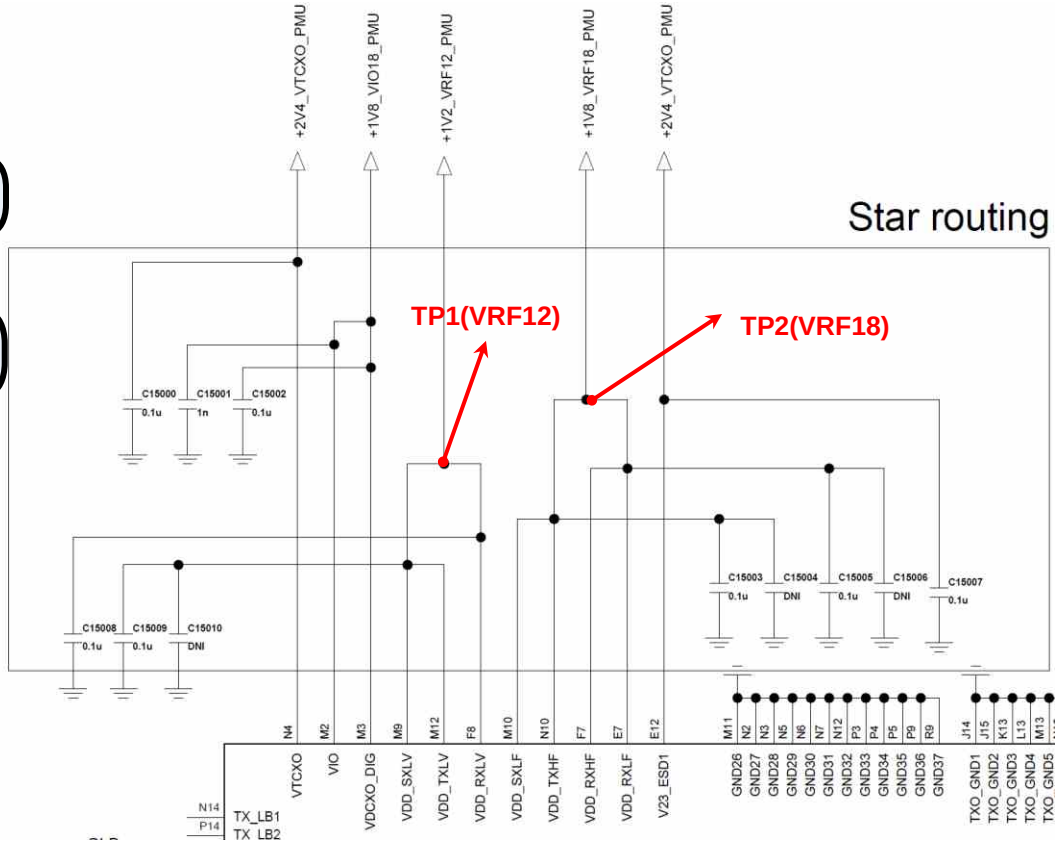

Copyright © 2017 LG Electronics. Inc. All right reserved. Only training and service purposes

3.3 FEMiD (D5323) Block

Checking FEMiD Block

Checking Flow

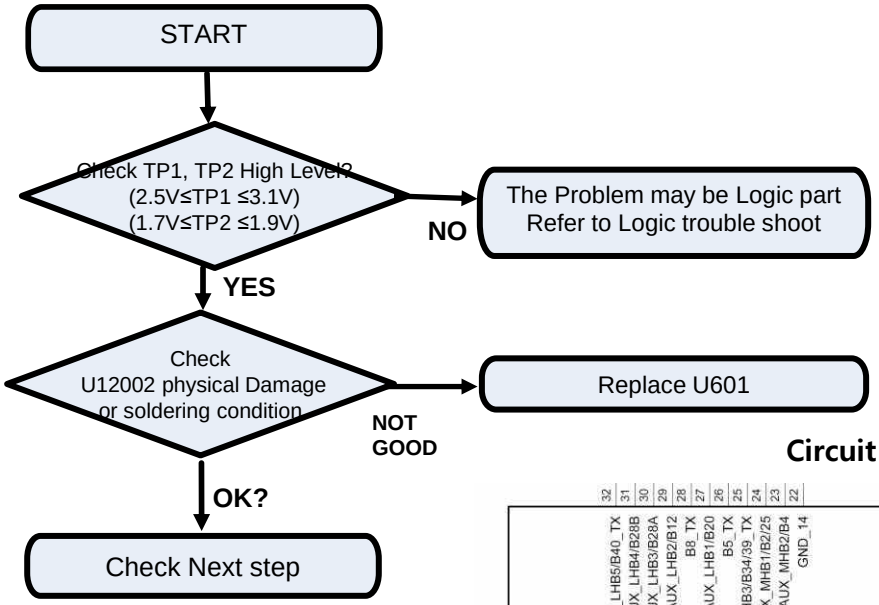

Image

BOT

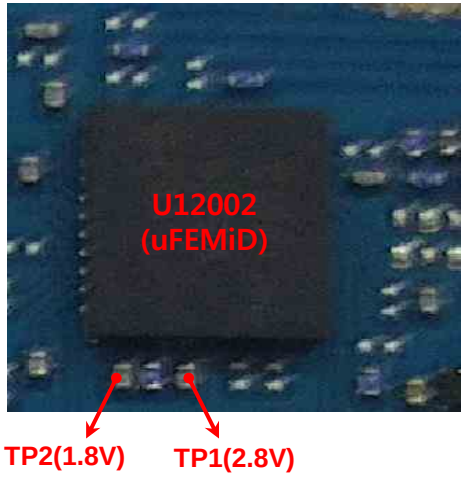

Circuit Diagram

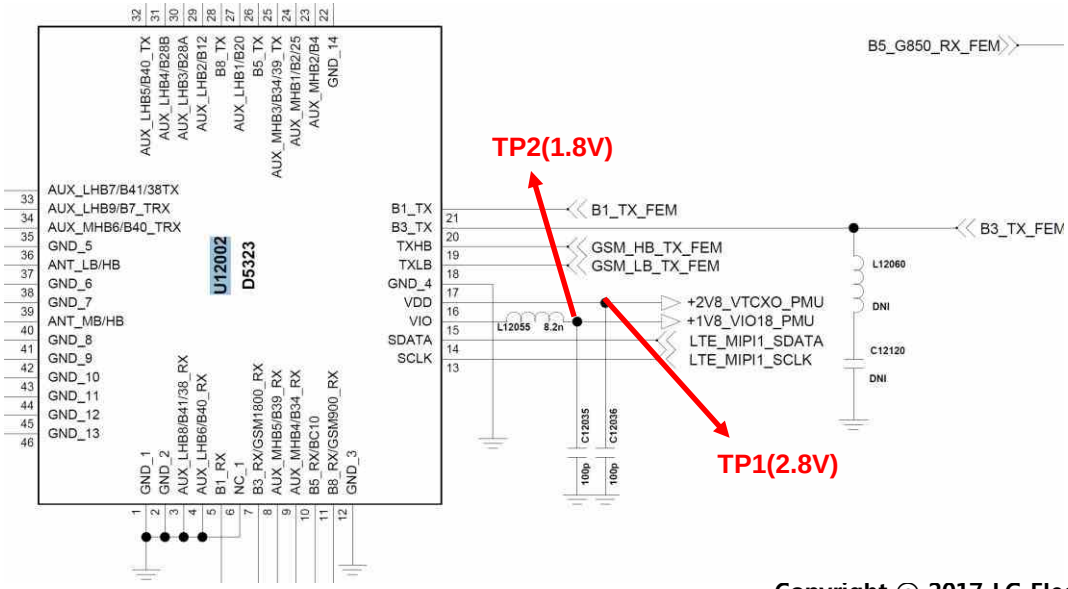

Copyright © 2017 LG Electronics. Inc. All right reserved. Only training and service purposes

3.4.1 GSM, WCDMA, LTE PART - PRx

Checking Rx signal path (GSM 850/900/1800/1900, WCDMA B1/B2/B5/B8, LTE B3/B7/B28)

Checking Flow

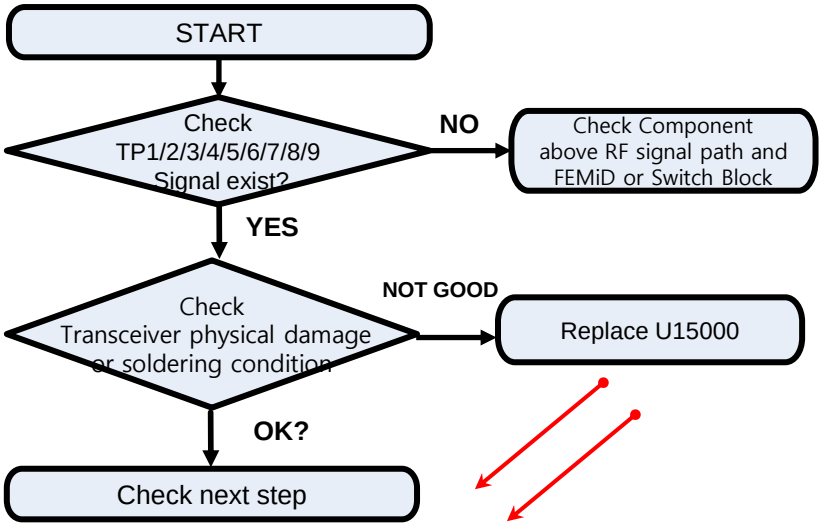

Image

BOT

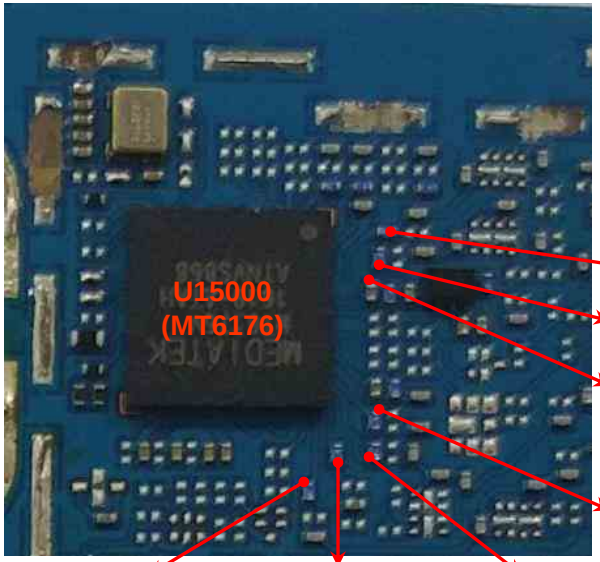

TP7 (B28B PRx)

TP1 (B1 PRx)

TP2 (G1800 B3 PRx)

TP3 (B7 PRx)

TP4 (G1900 B2 PRx)

TP5 (G900, B8 PRx)

TP6 (B28A PRx)

TP8 (G850, B5 PRx)

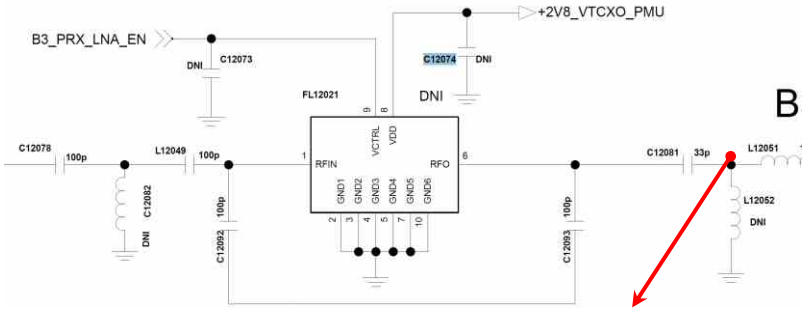

B3, G1800 PRX

TP2 (G1800 B3 PRx)

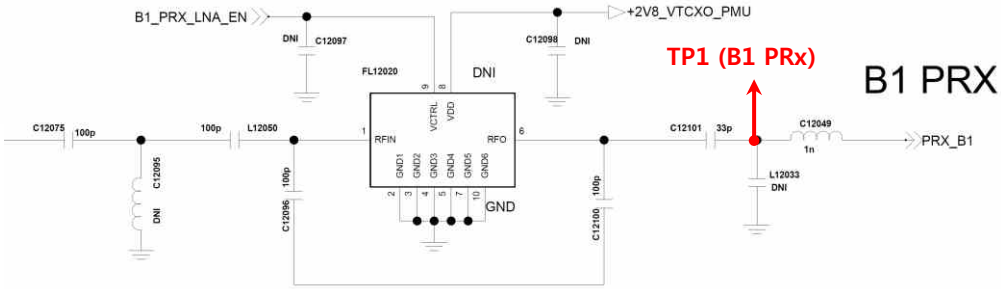

TP1 (B1 PRx)

B1 PRX

Copyright © 2017 LG Electronics. Inc. All right reserved. Only training and service purposes

3.4.1 GSM, WCDMA, LTE PART - PRx
(GSM 850/900/1800/1900 WCDMA B2/B4/B5 LTE B2/B4/B5/B12)

Circuit Diagram

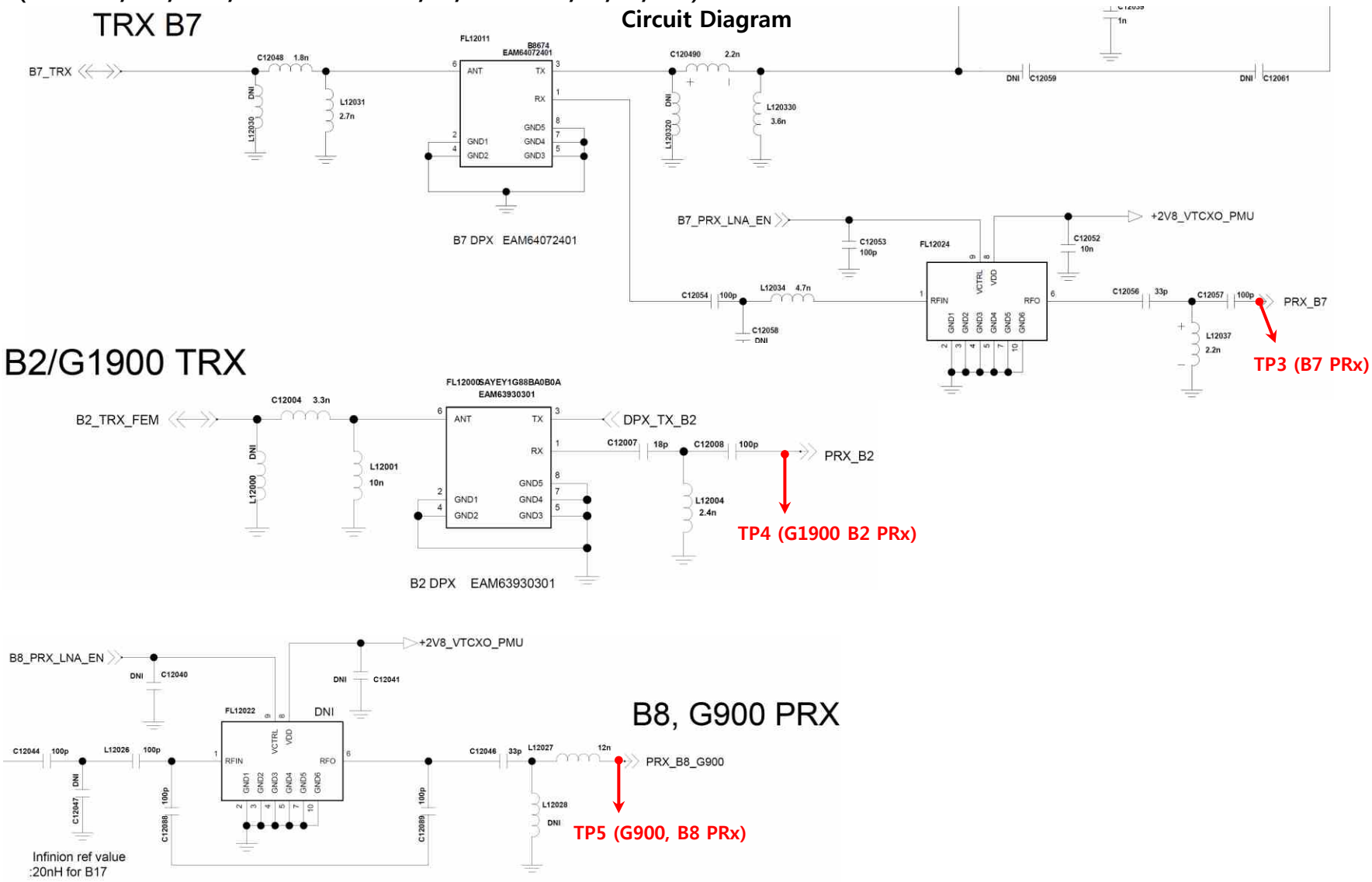

Copyright © 2017 LG Electronics. Inc. All right reserved. Only training and service purposes

3.4.1 GSM, WCDMA, LTE PART - PRx

(GSM 850/900/1800/1900 WCDMA B2/B4/B5 LTE B2/B4/B5/B12)

Circuit Diagram

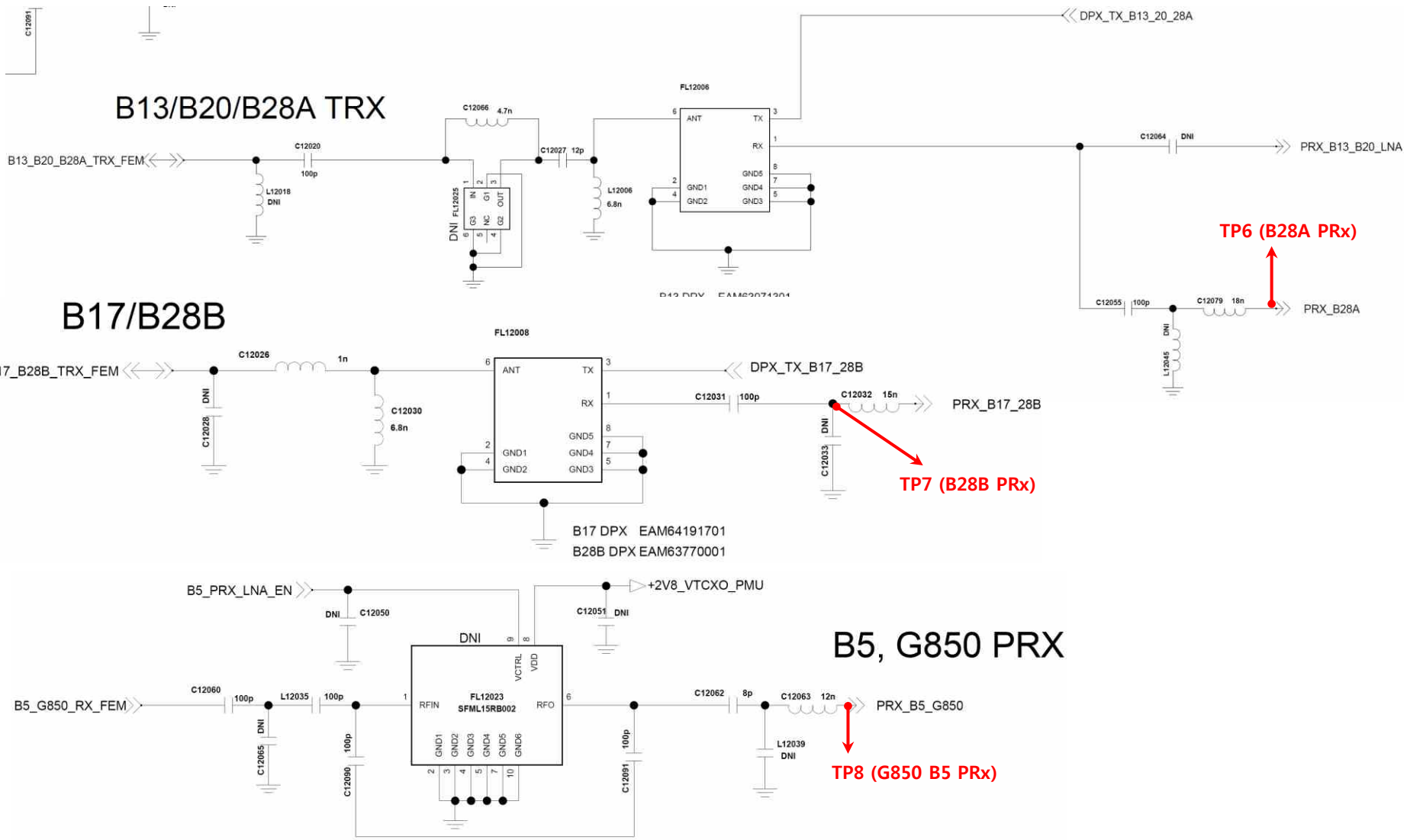

Copyright © 2017 LG Electronics. Inc. All right reserved. Only training and service purposes

3.4.2.1 WCDMA, LTE PART - Tx

Checking Tx signal path(WCDMA B1/B2/B5/B8 LTE B3/B7/B28)

Checking Flow

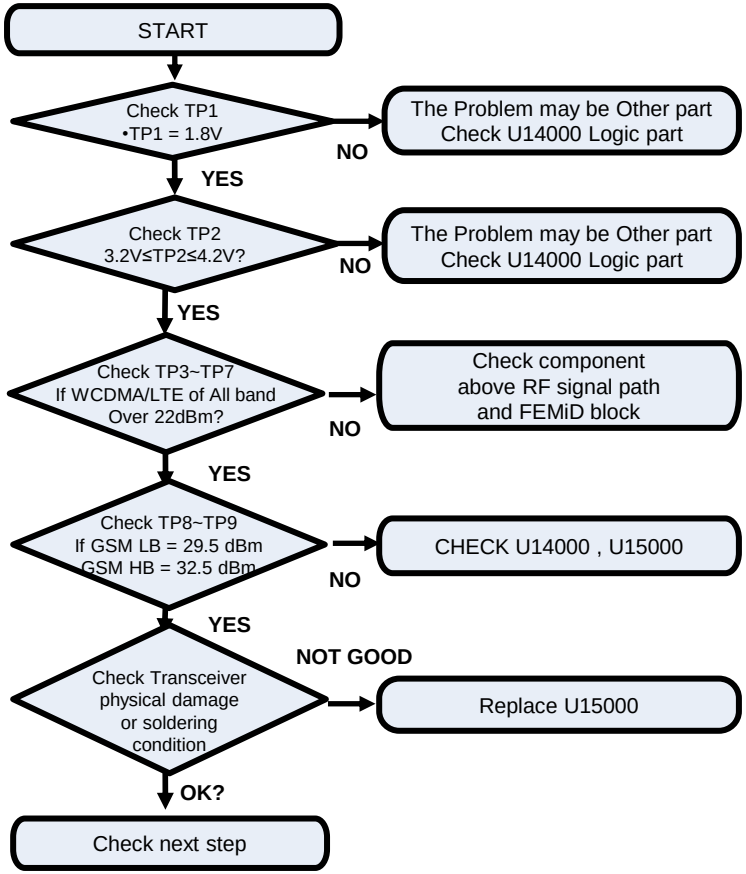

Image

BOT

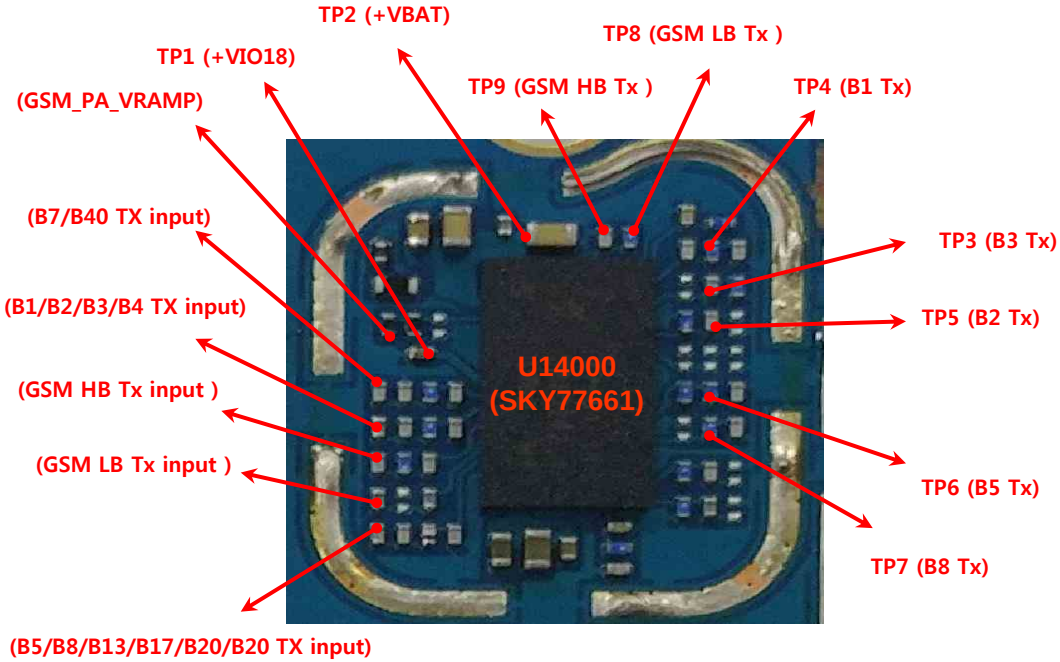

Copyright © 2017 LG Electronics. Inc. All right reserved. Only training and service purposes

3.4.2.1 WCDMA, LTE PART - Tx

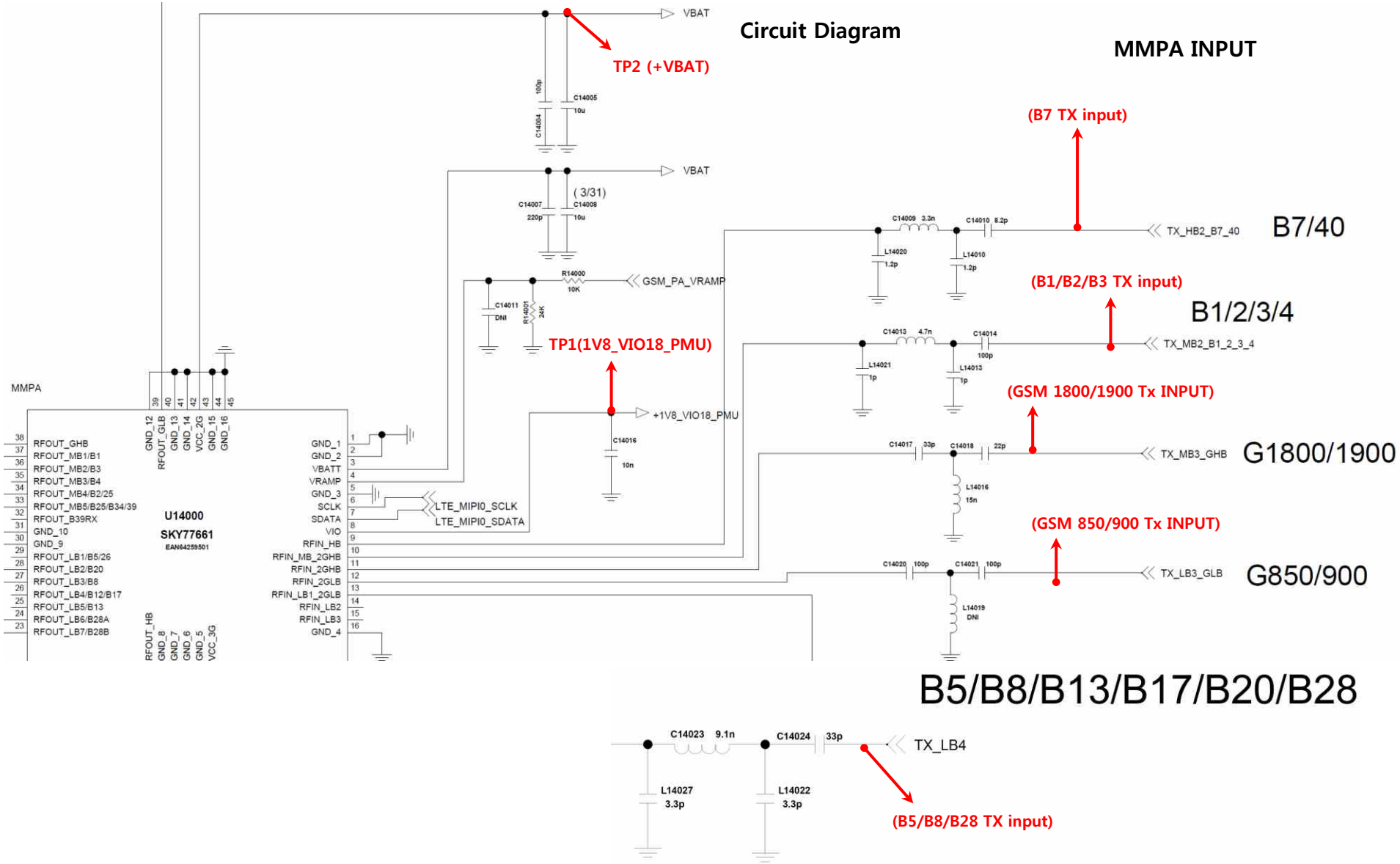

Copyright © 2017 LG Electronics. Inc. All right reserved. Only training and service purposes

3.4.2.2 GSM PART - TX

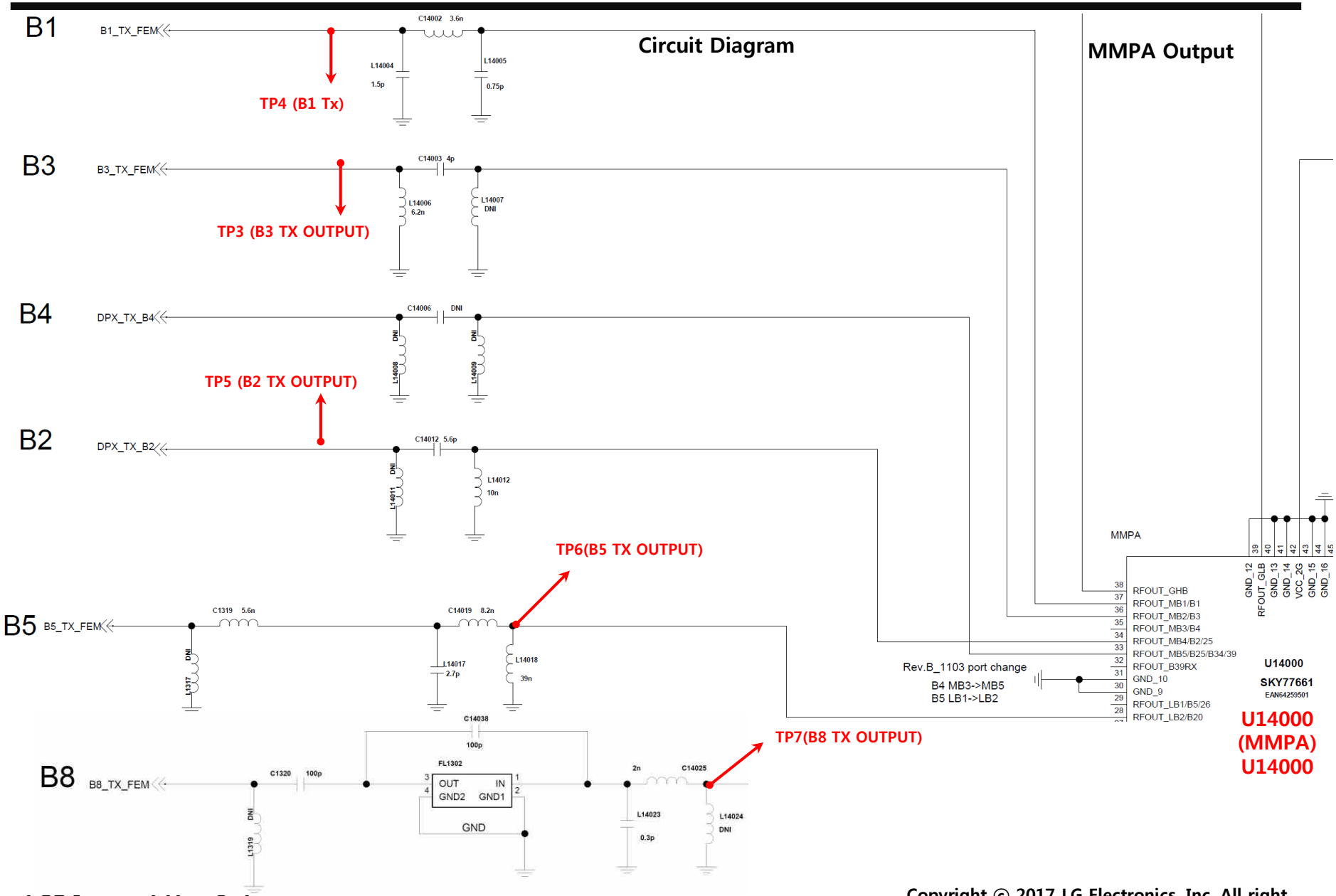

Copyright © 2017 LG Electronics. Inc. All right reserved. Only training and service purposes

3.4.2.2 GSM PART - TX

Circuit Diagram

MMPA Output

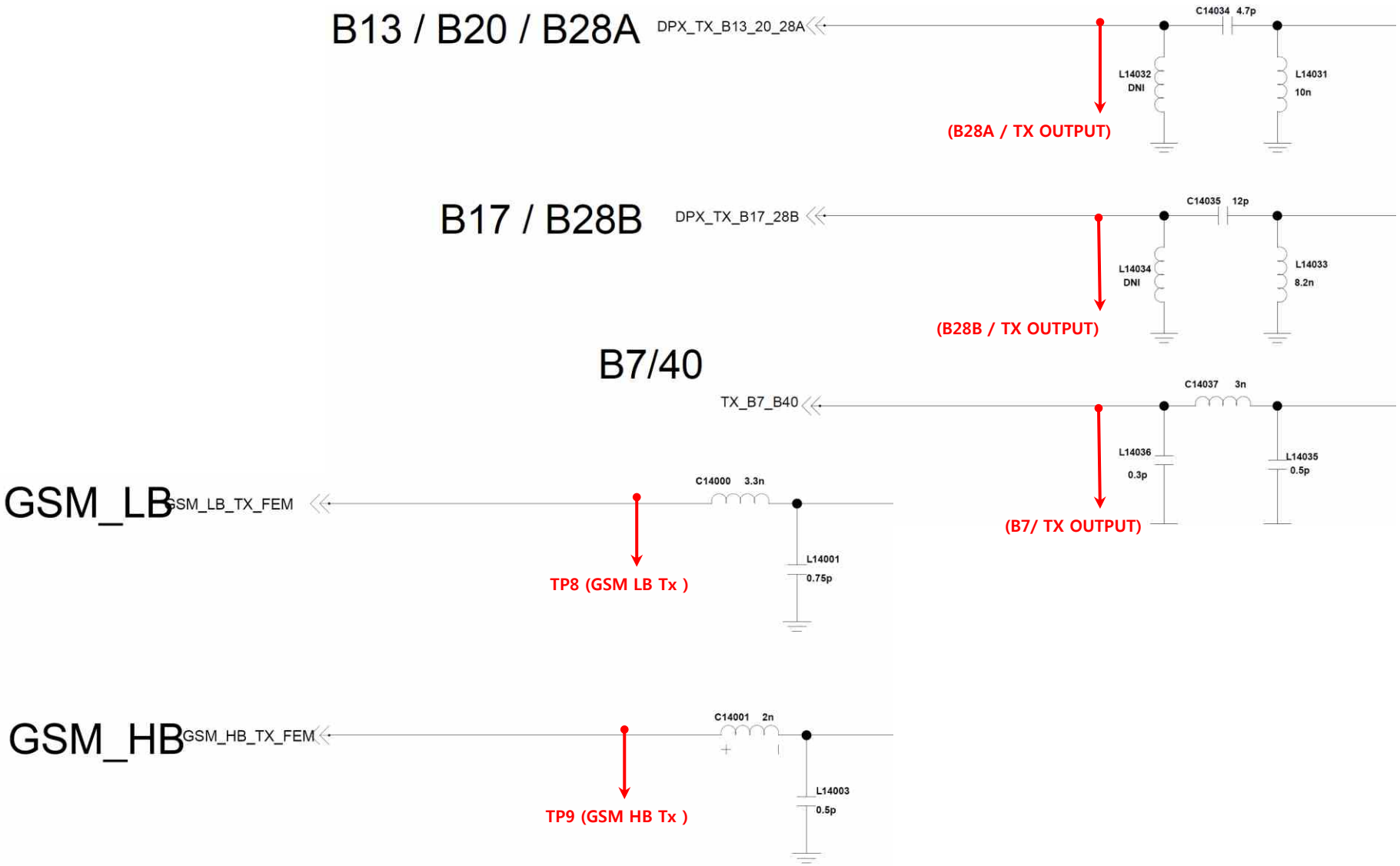

Copyright © 2017 LG Electronics. Inc. All right reserved. Only training and service purposes

3.4.3 GSM,WCDMA, LTE PART - DRX

Checking DRX RF signal path (B3/B7/B28)

Checking Flow

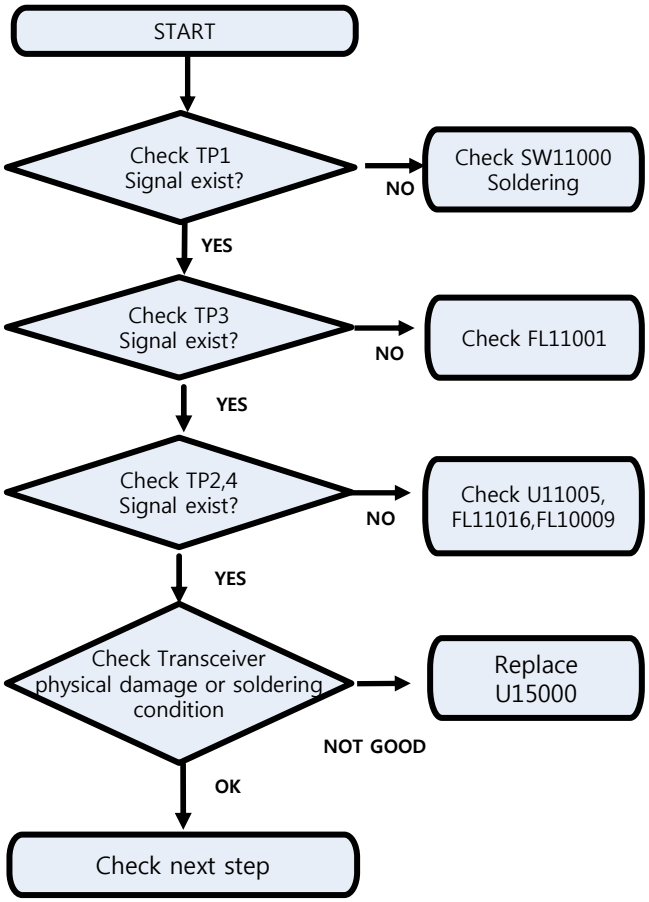

Image

TOP

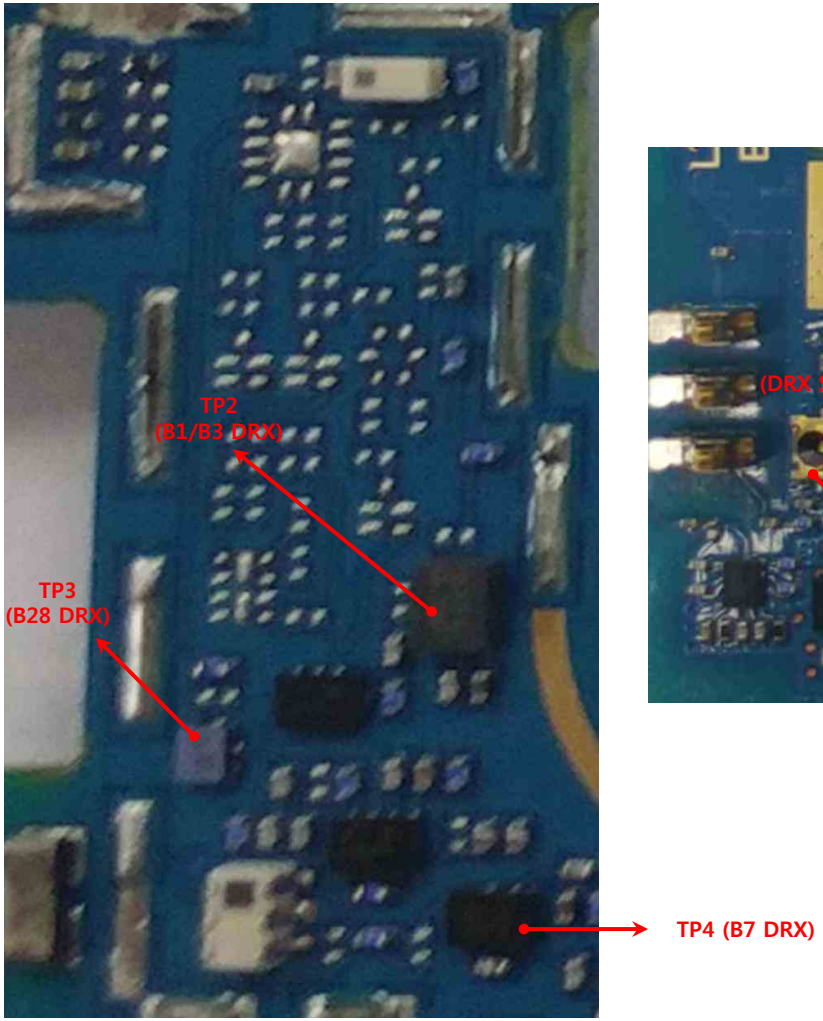

BOTTOM

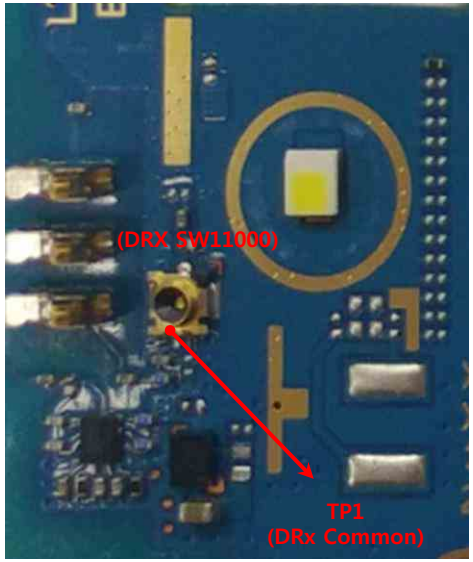

Copyright © 2017 LG Electronics. Inc. All right reserved. Only training and service purposes

3.4.3 GSM,WCDMA,LTE PART - DRX

Checking DRX RF signal path (B3/B7/B28)

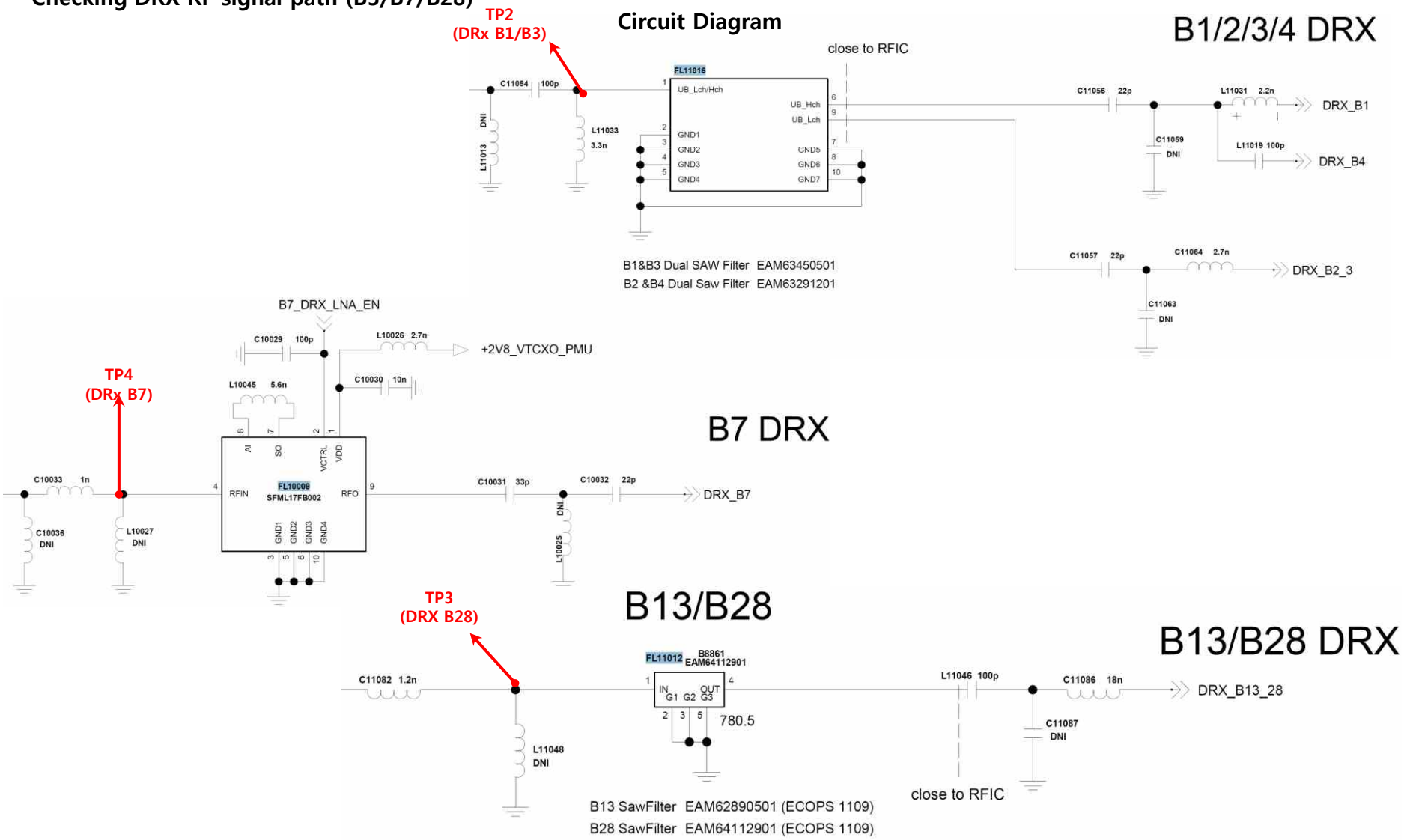

Copyright © 2017 LG Electronics. Inc. All right reserved. Only training and service purposes

3.5 BT/WIFI

Checking Flow

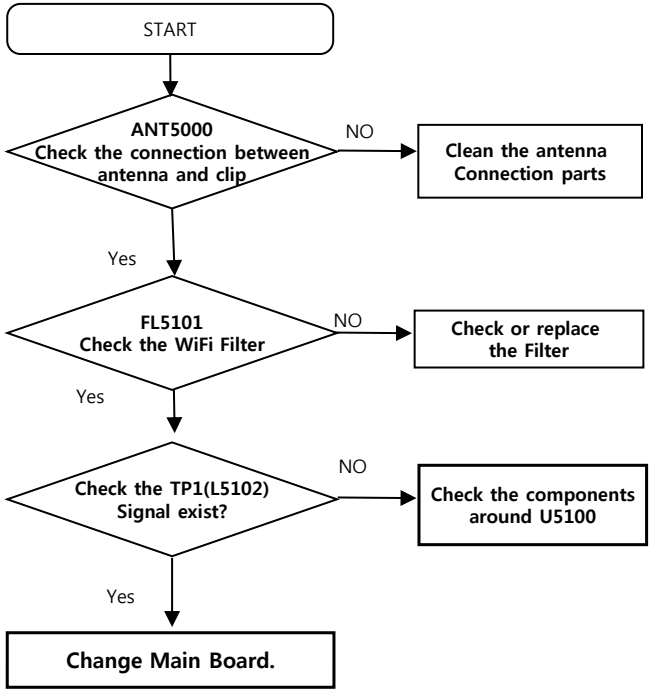

Image

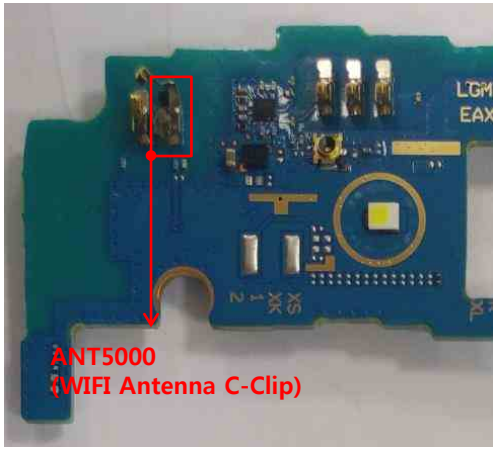

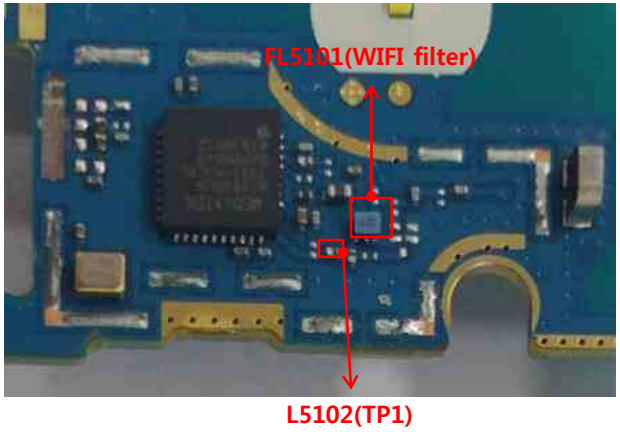

Circuit Diagram

Copyright © 2017 LG Electronics. Inc. All right reserved. Only training and service purposes

3.6 GPS PART

Checking Flow

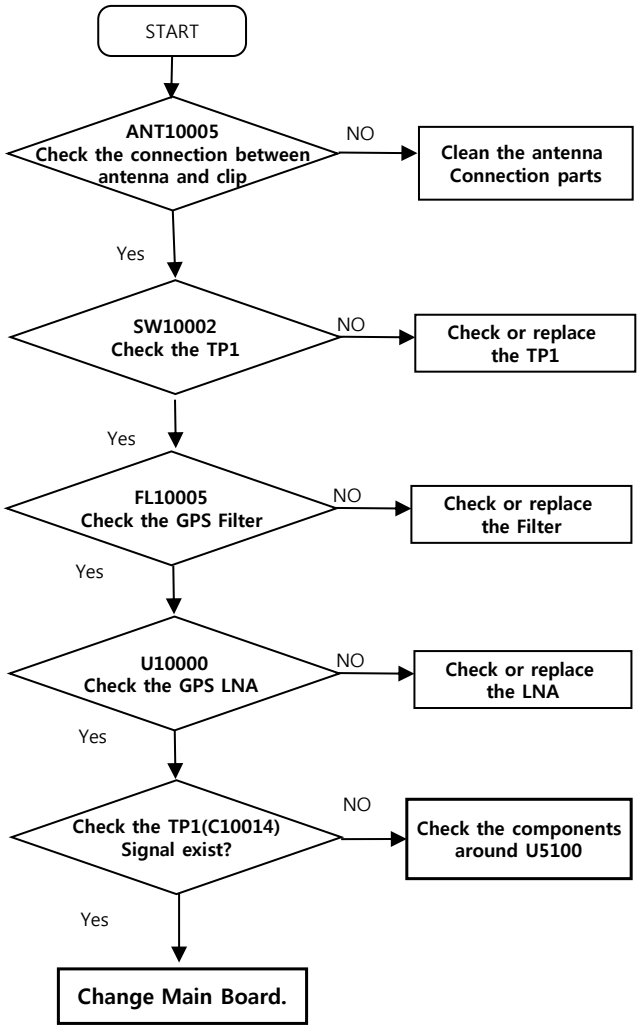

BOT

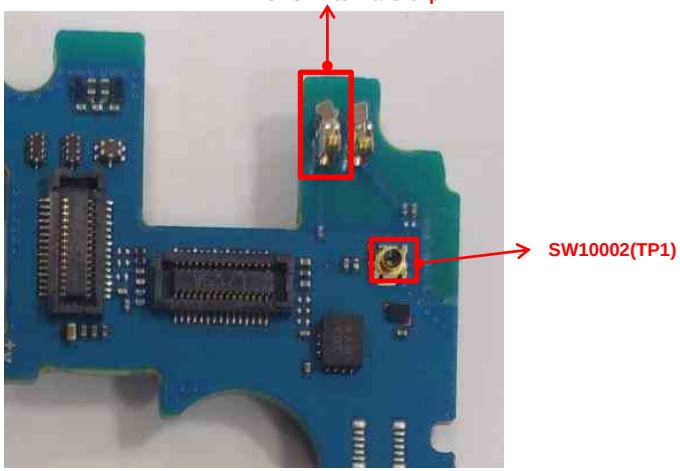

TOP

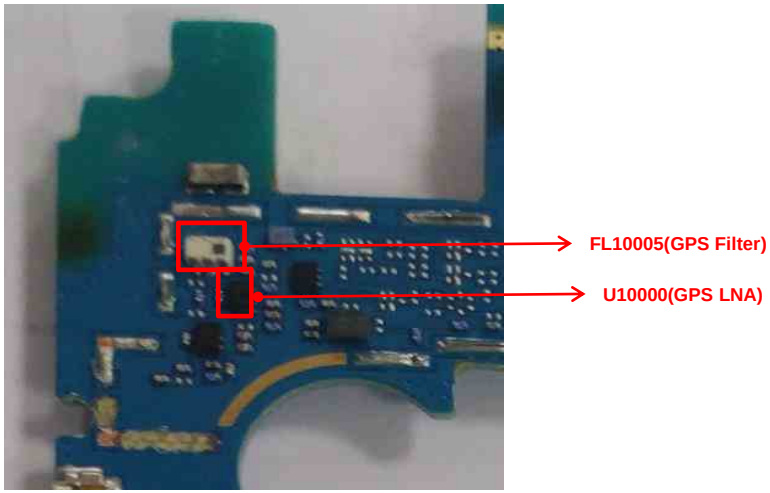

Copyright © 2017 LG Electronics. Inc. All right reserved. Only training and service purposes

3.6 GPS PART

Circuit Diagram

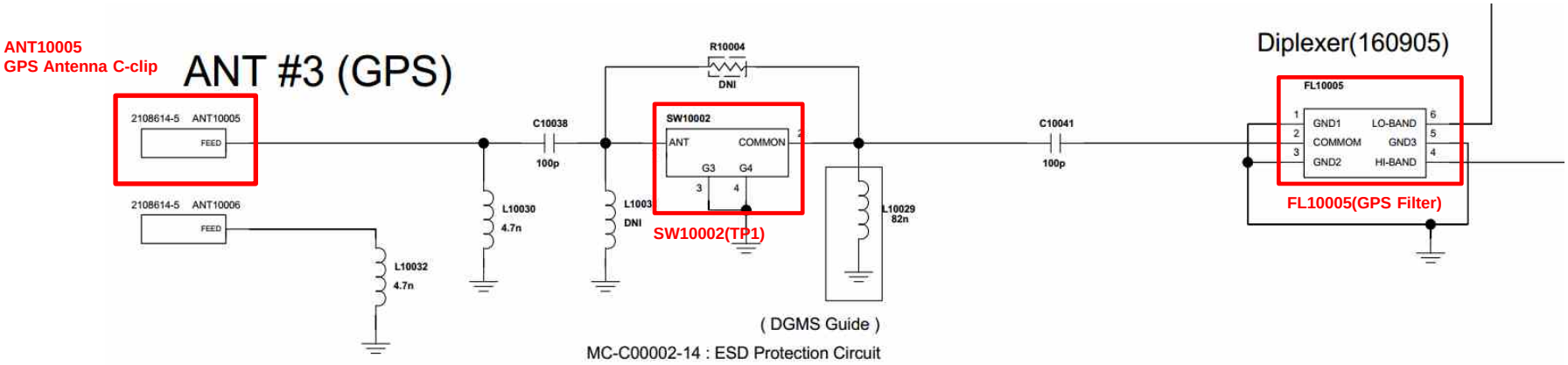

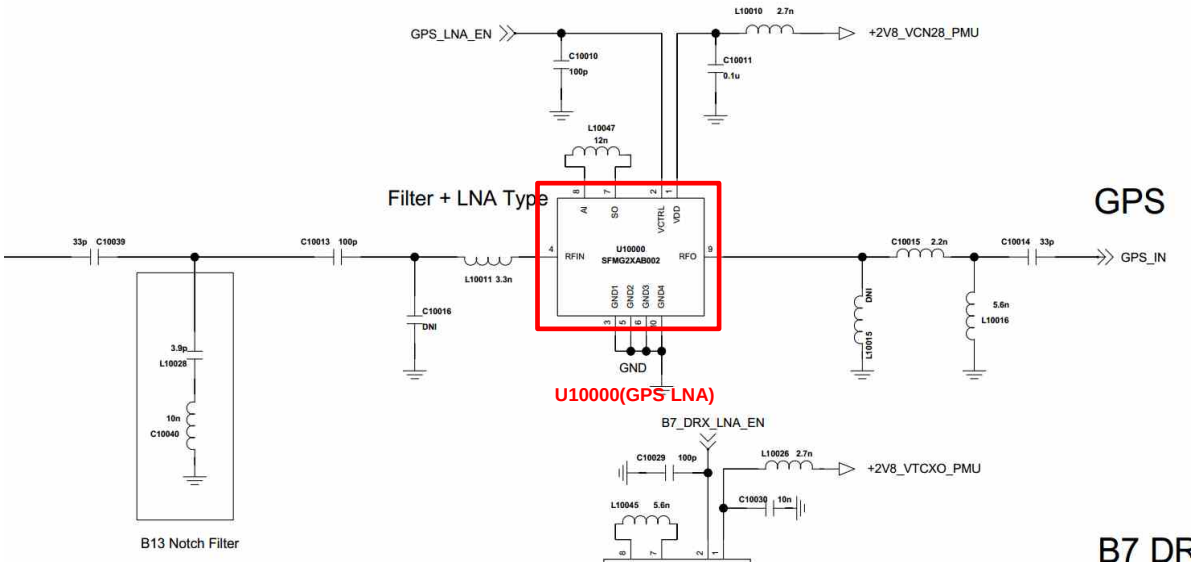

Copyright © 2017 LG Electronics. Inc. All right reserved. Only training and service purposes

3.7 FM Part

Checking Flow

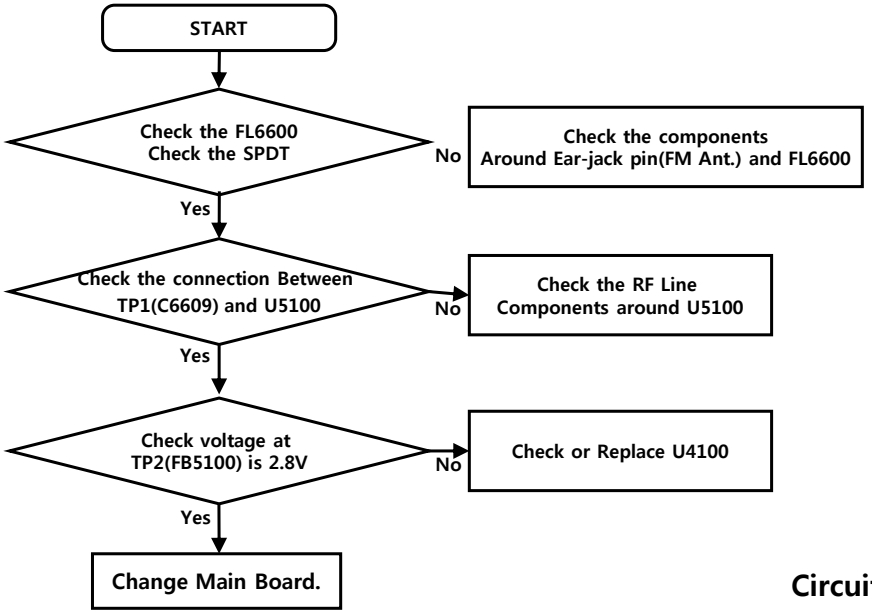

Image

TOP

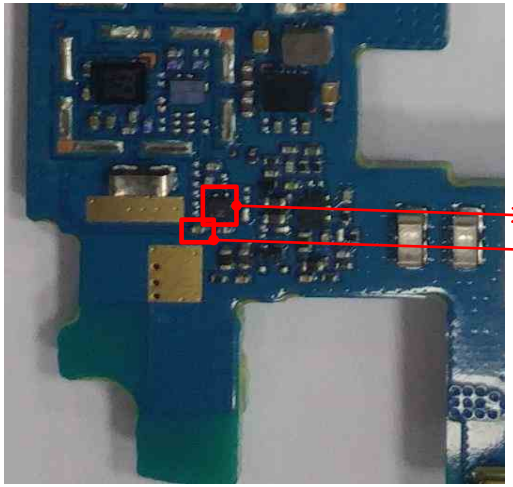

Circuit Diagram

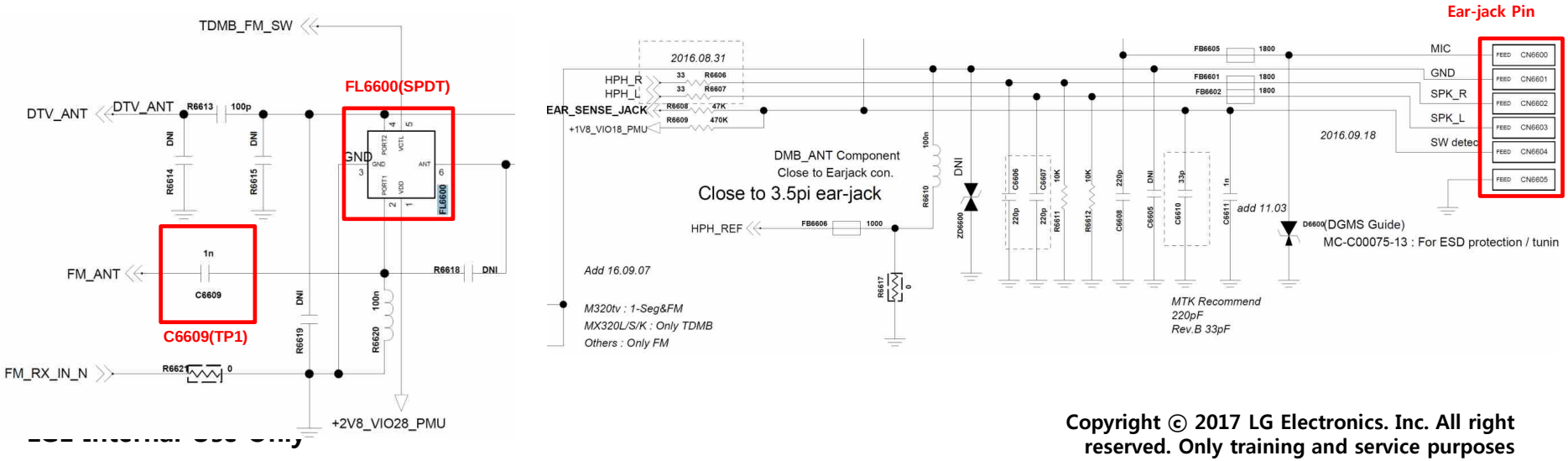

Copyright © 2017 LG Electronics. Inc. All right reserved. Only training and service purposes

3.8 DTV Part

Checking Flow

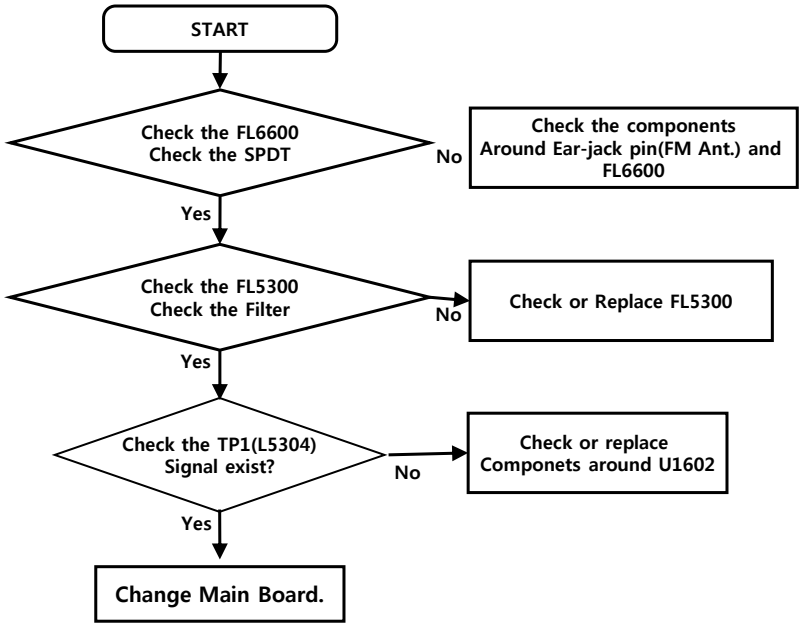

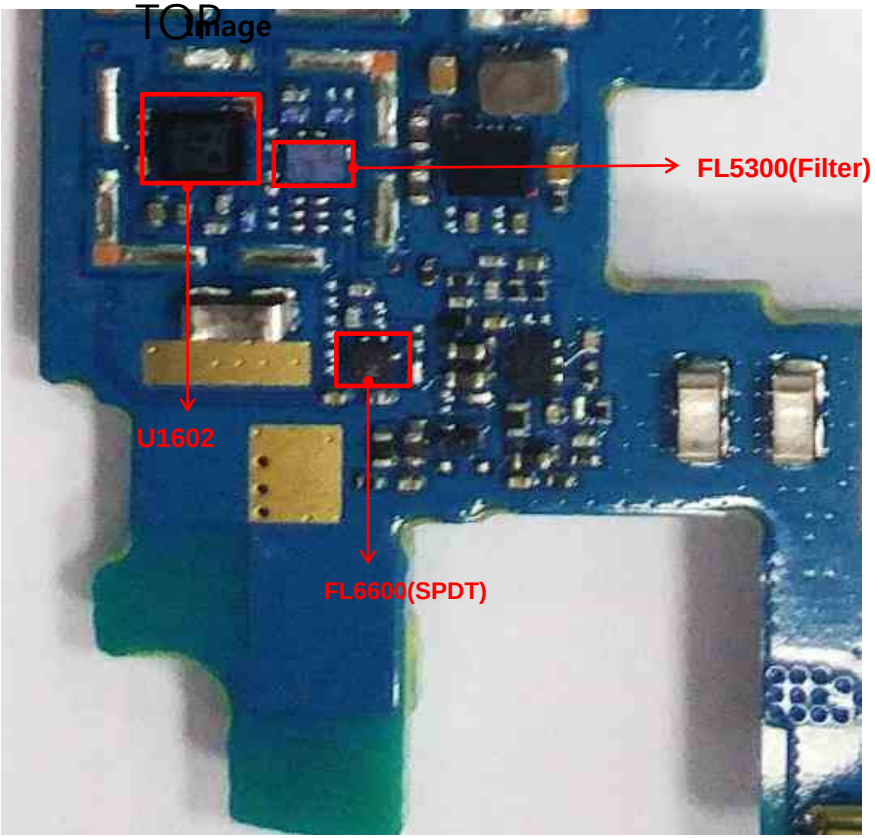

Copyright © 2017 LG Electronics. Inc. All right reserved. Only training and service purposes

3.8 DTV Part

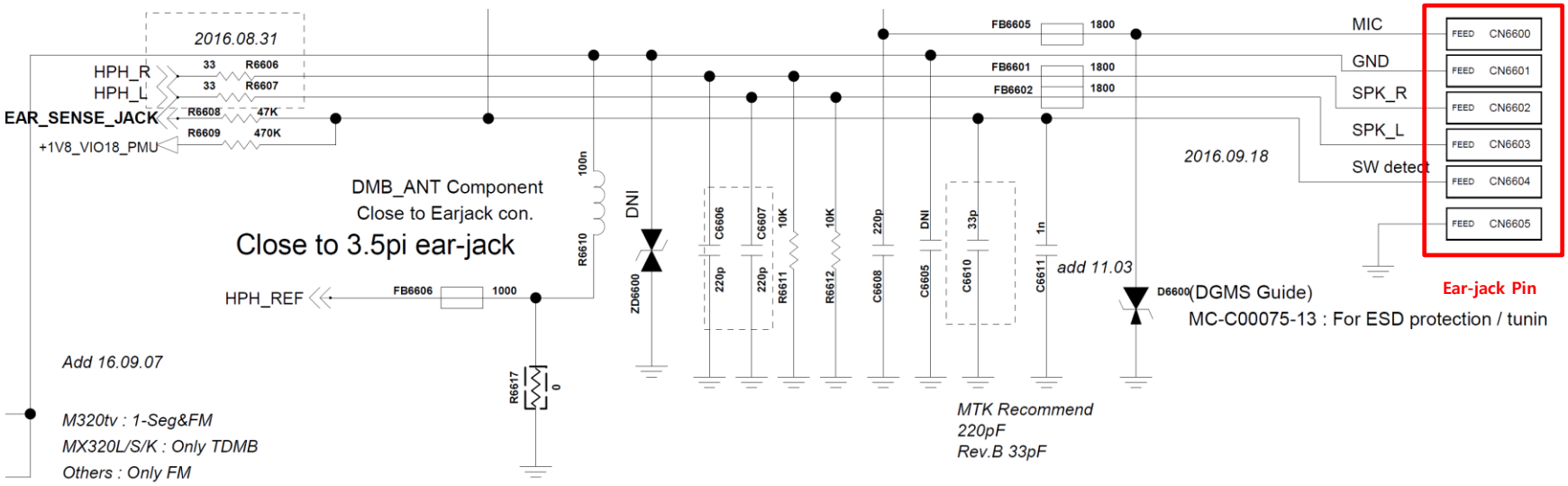

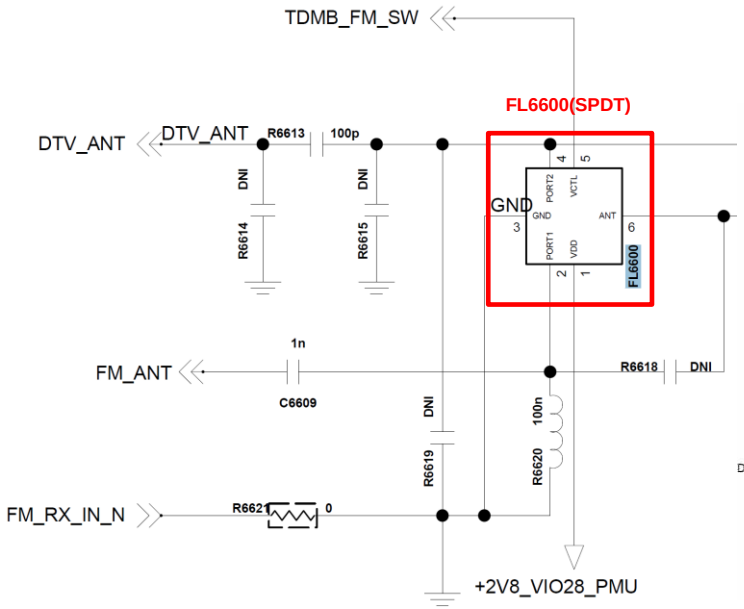

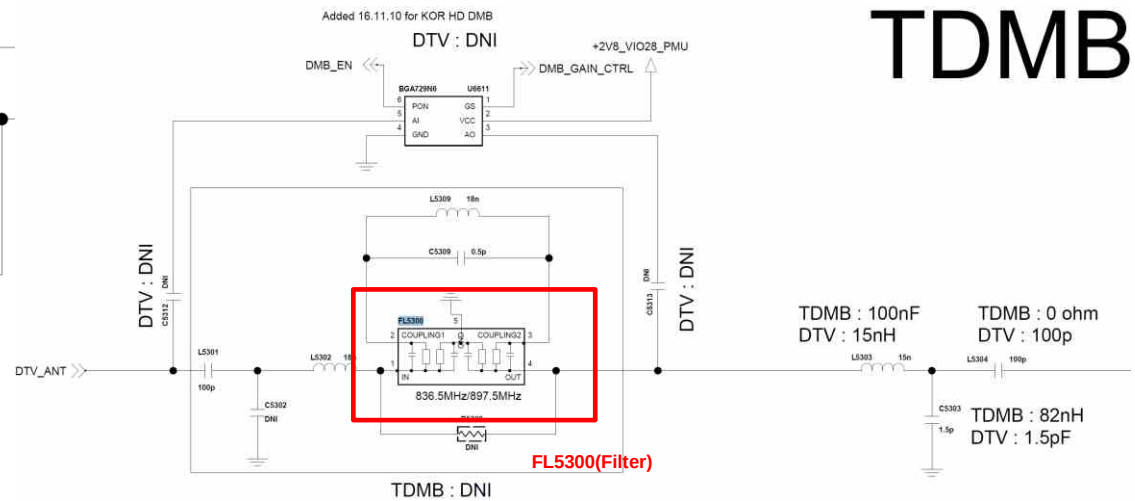

Copyright © 2017 LG Electronics. Inc. All right reserved. Only training and service purposes

Checking Power signal (Battery connector, Power Key, PMIC Regulator, MSM, Memory)

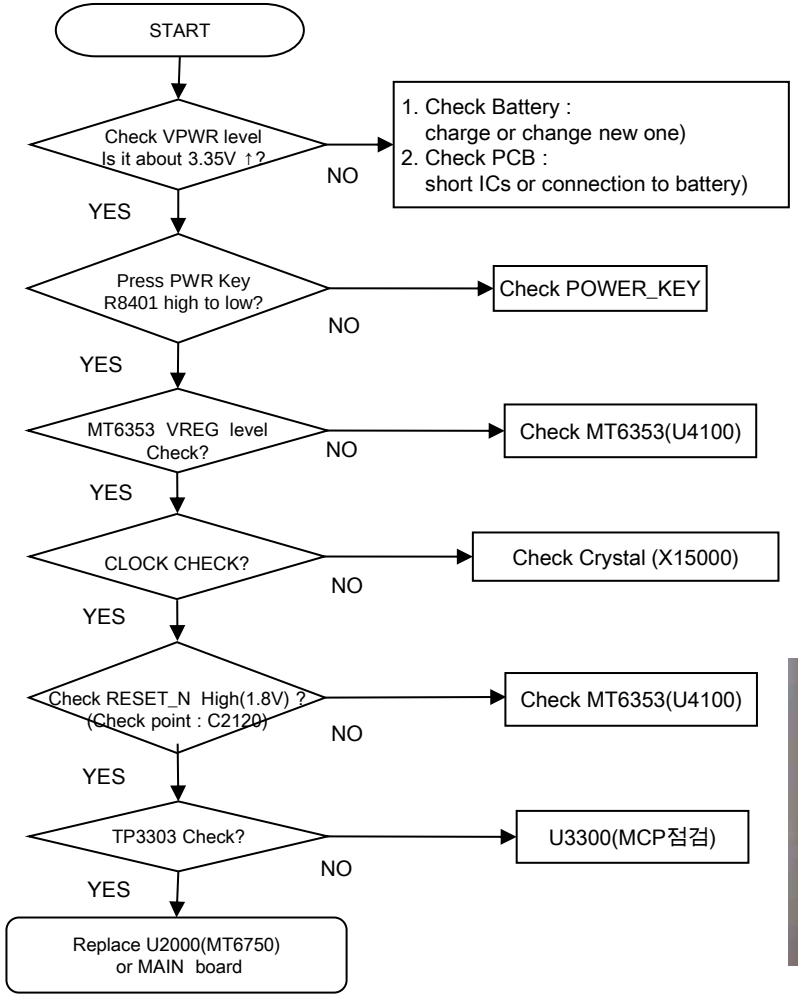

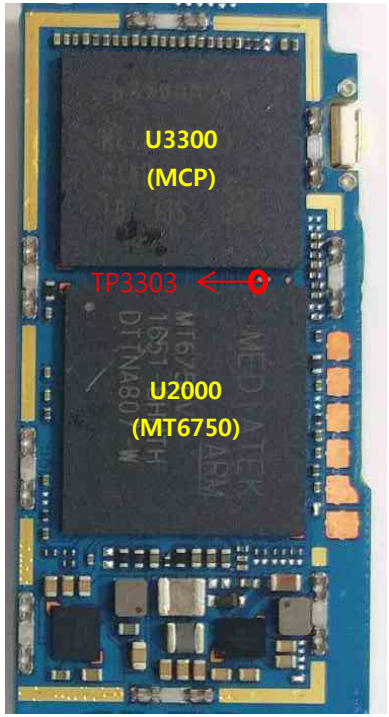

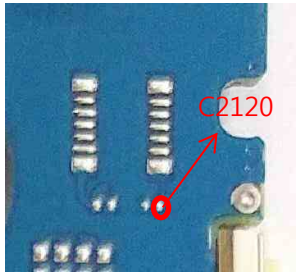

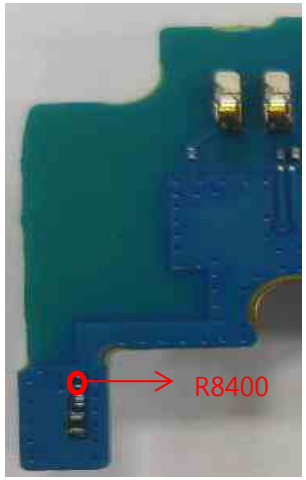

Copyright © 2017 LG Electronics. Inc. All right reserved. Only training and service purposes

Checking Power signal (Battery connector, Power Key, PMIC Regulator, AP, Memory)

Circuit Diagram

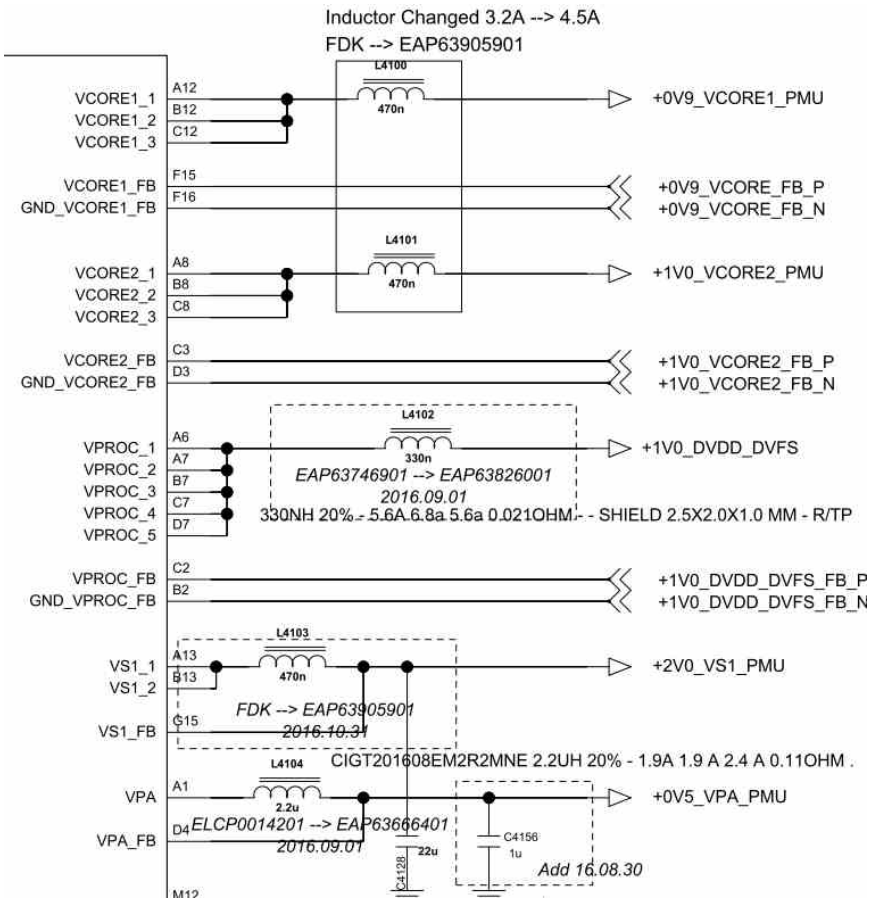

MT6353 (U4100)

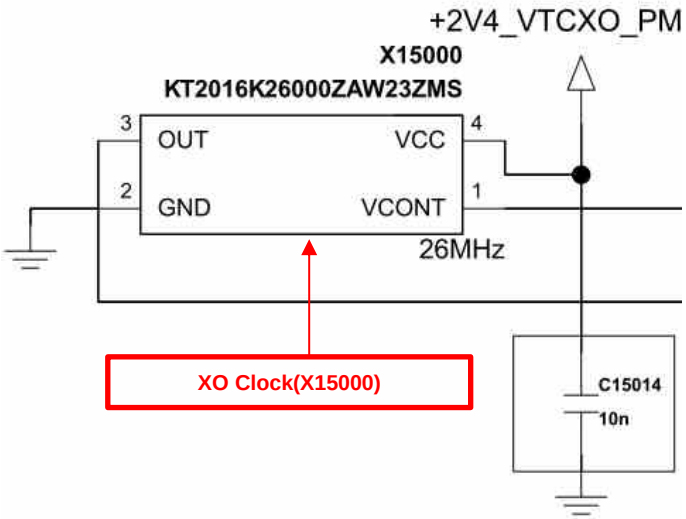

XO Clock(X15000)

[JTAG]

Sync. LV5

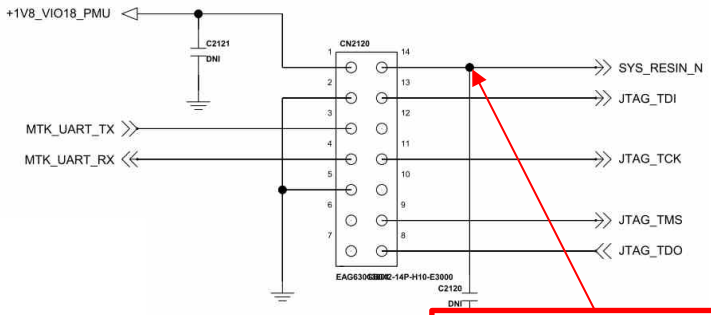

SYS_RESET_N(C2120)

Copyright © 2017 LG Electronics. Inc. All right reserved. Only training and service purposes

There are two charger ICs for dual charging.

Checking Flow

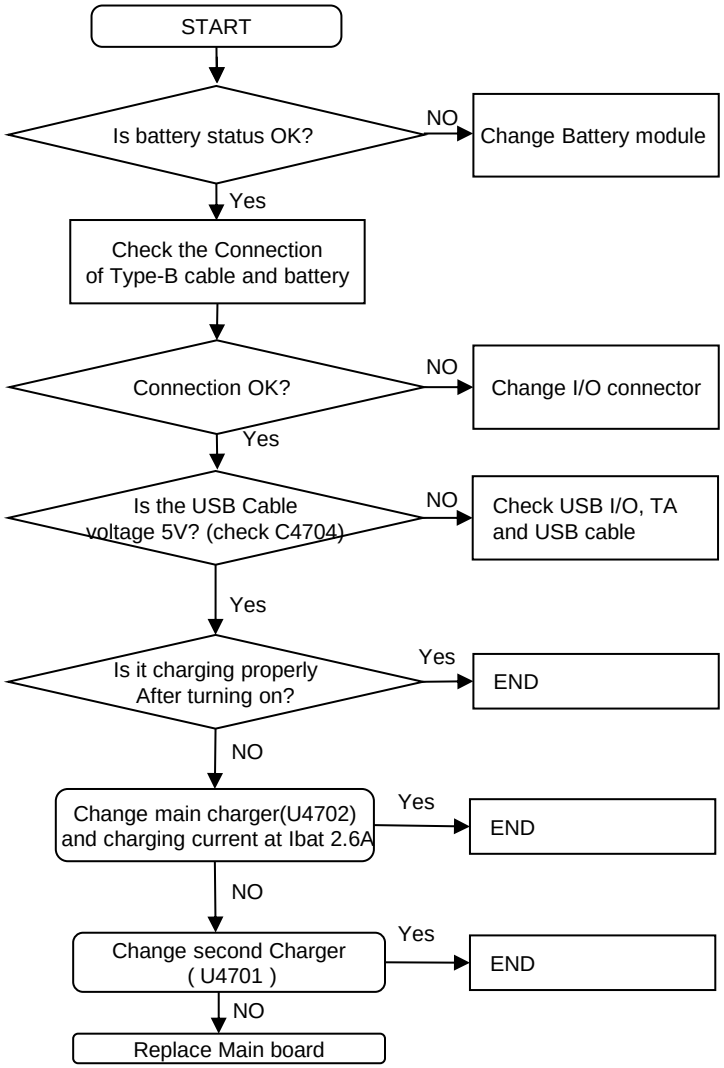

Image

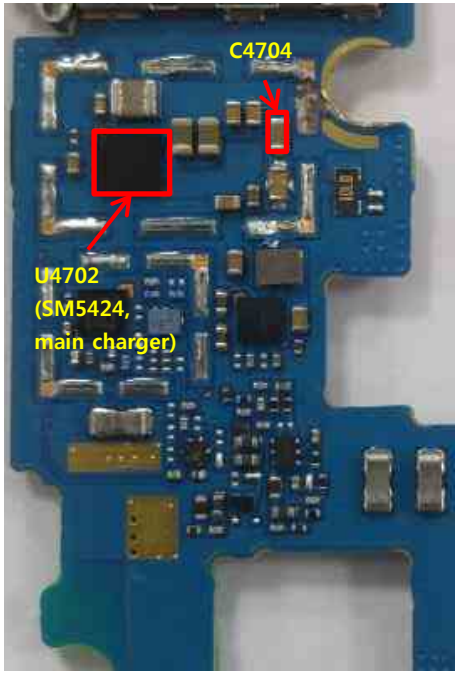

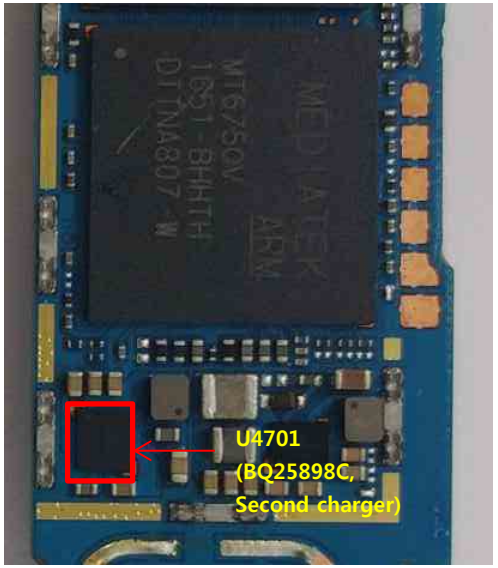

Copyright © 2017 LG Electronics. Inc. All right reserved. Only training and service purposes

The receiver control signals are generated by PM8937(U4100), the chipset and the receiver are to be checked out.

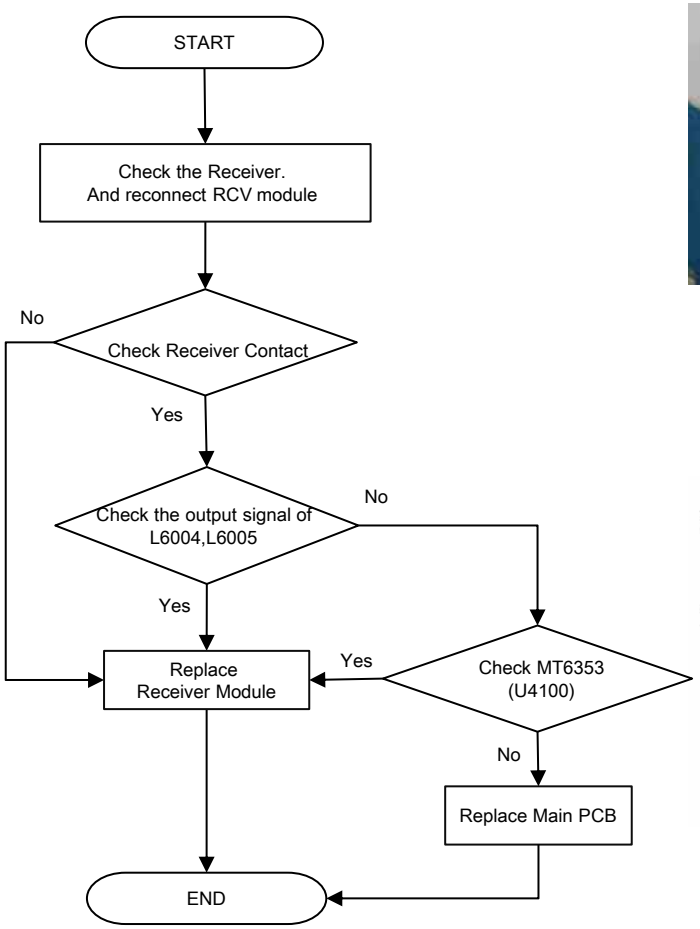

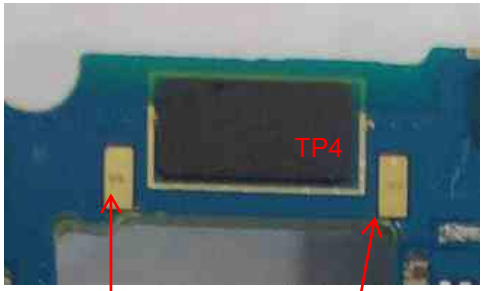

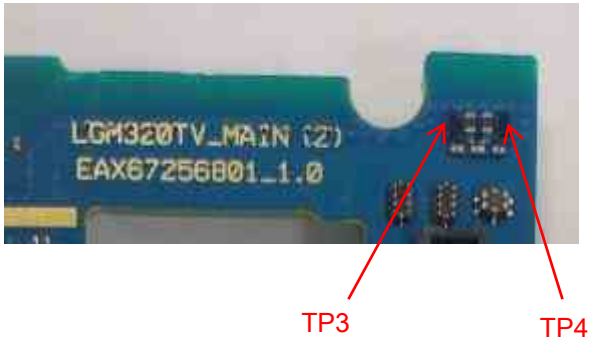

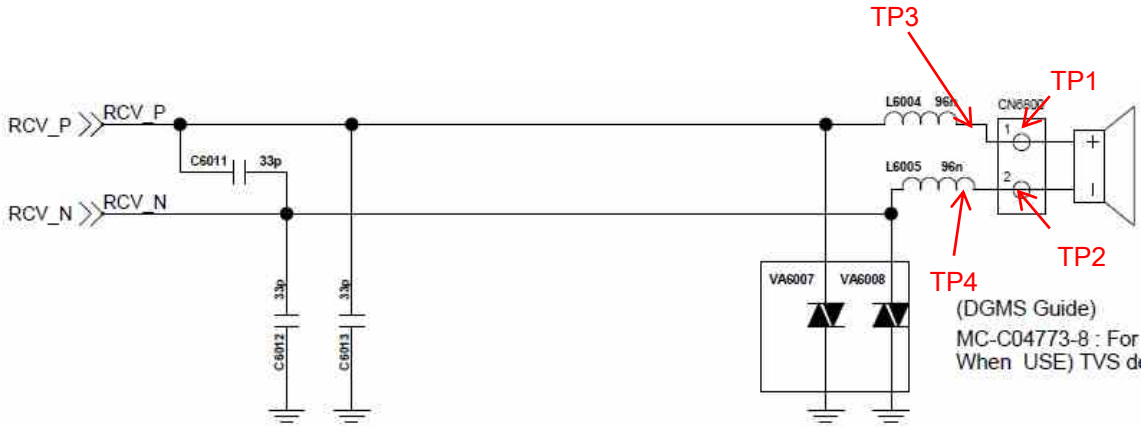

Receiver

Copyright © 2017 LG Electronics. Inc. All right reserved. Only training and service purposes

The Speaker control signals are generated by MT6353(U4100) and TPA2051(U6610) chipset and the speaker are to be checked out.

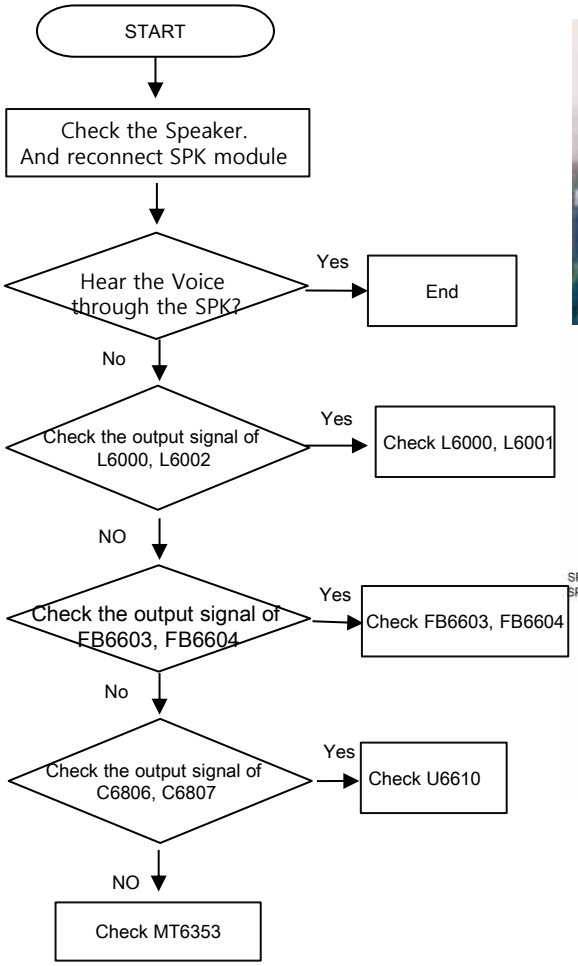

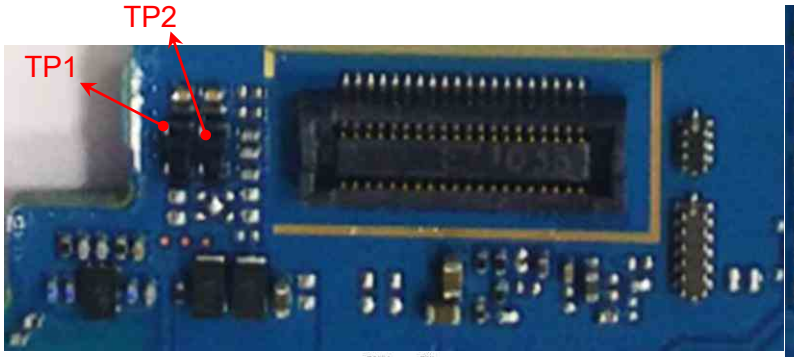

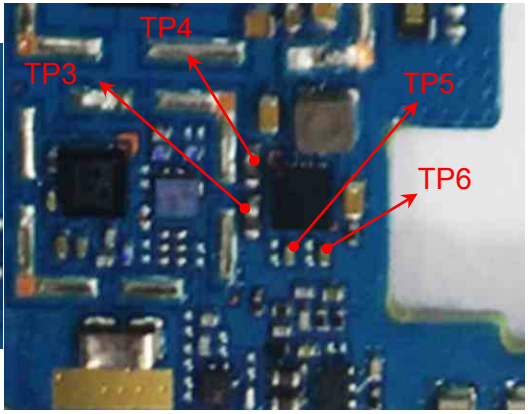

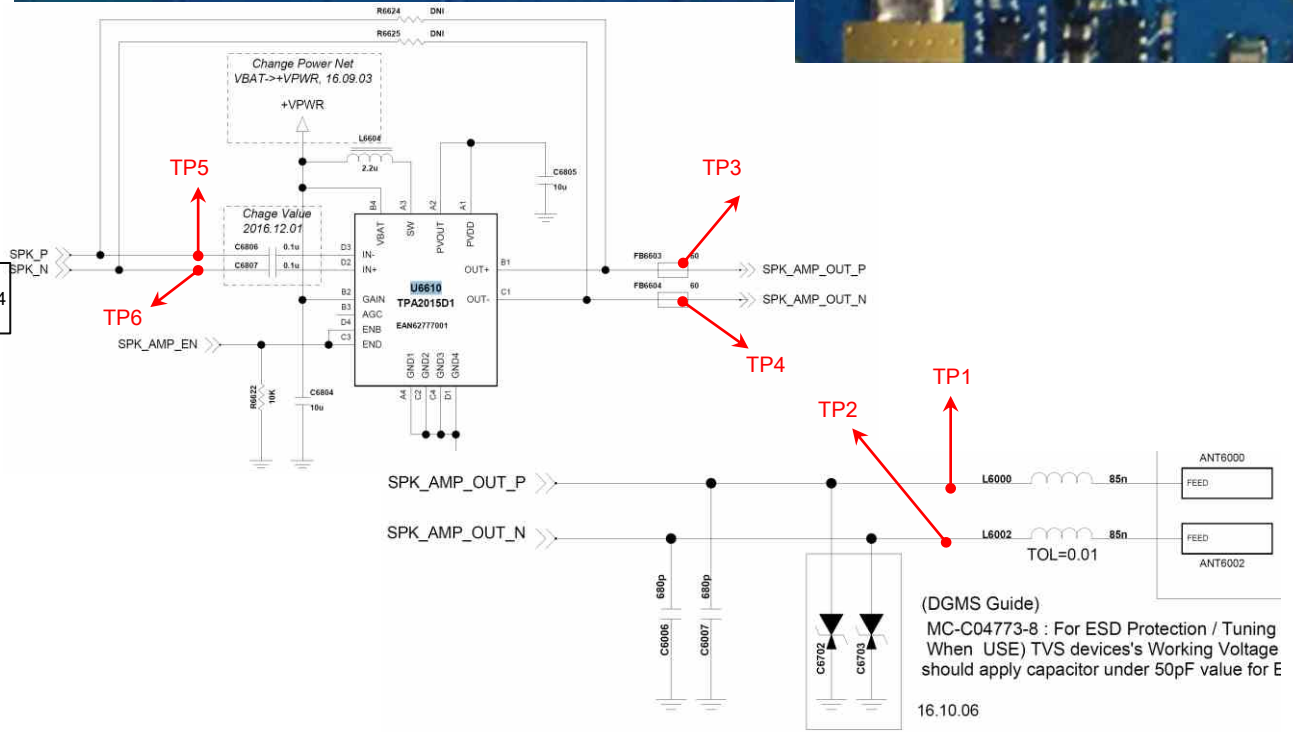

Copyright © 2017 LG Electronics. Inc. All right reserved. Only training and service purposes

It's operating voice call(except speakerphone), voice recording, camcorder recording.

Checking Flow

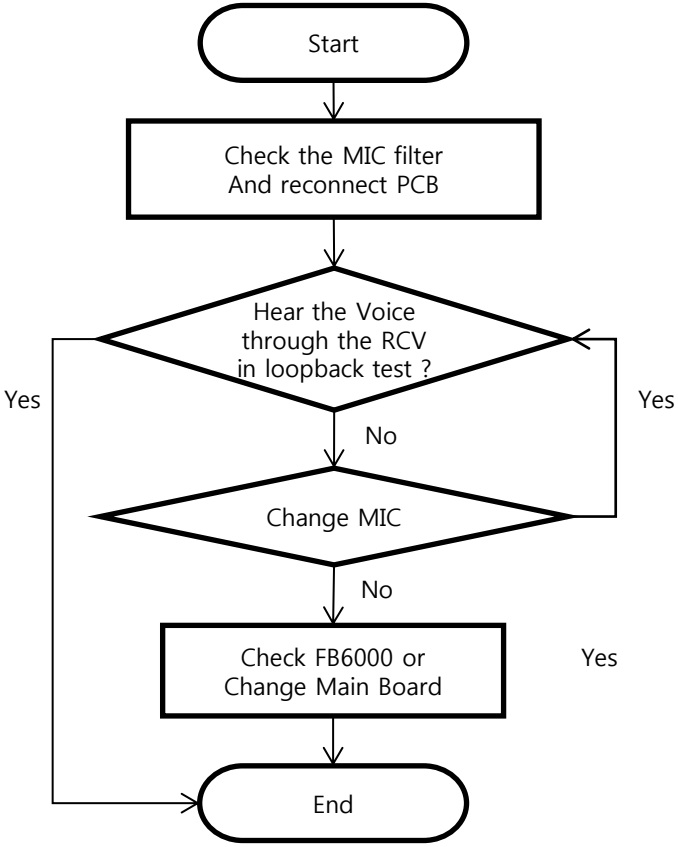

<Main MIC>

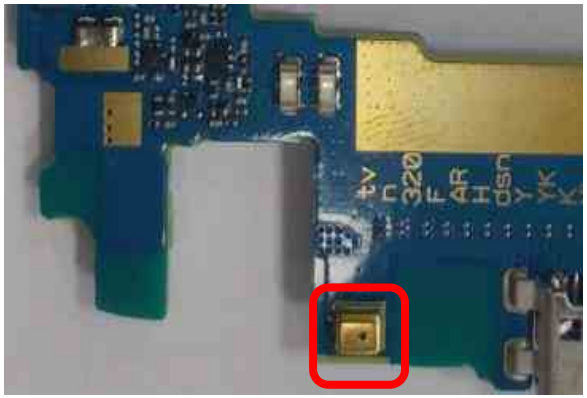

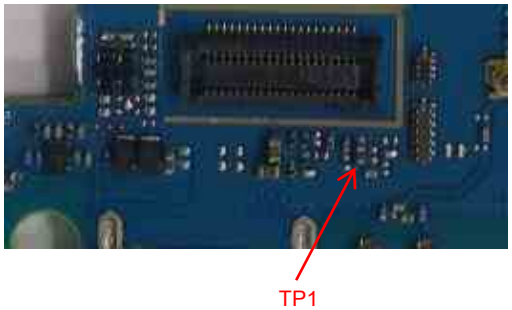

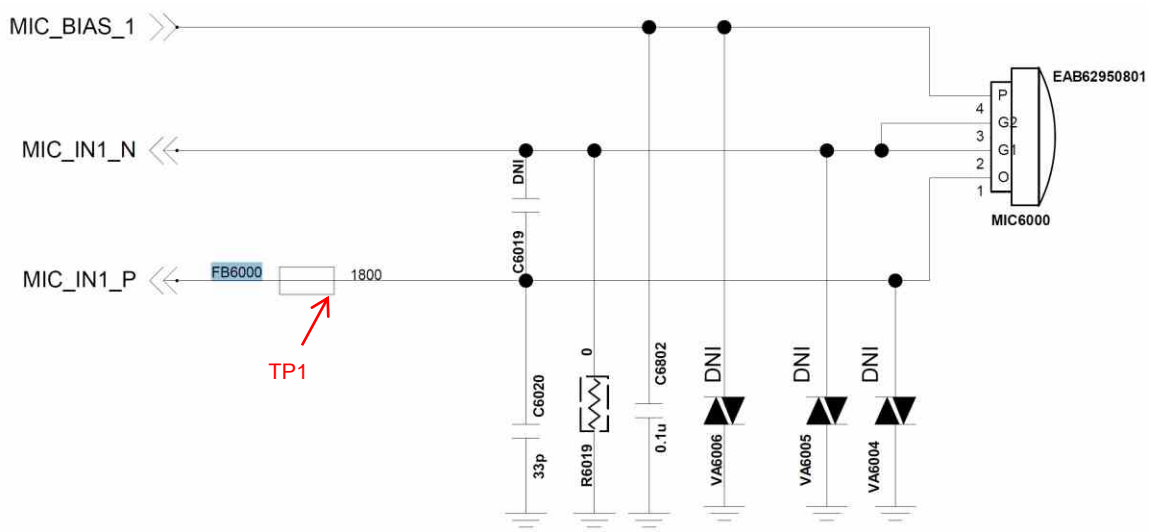

Copyright © 2017 LG Electronics. Inc. All right reserved. Only training and service purposes

3.11.4 Audio sub(2nd) MIC

It's operating Speakerphone call.

Checking Flow

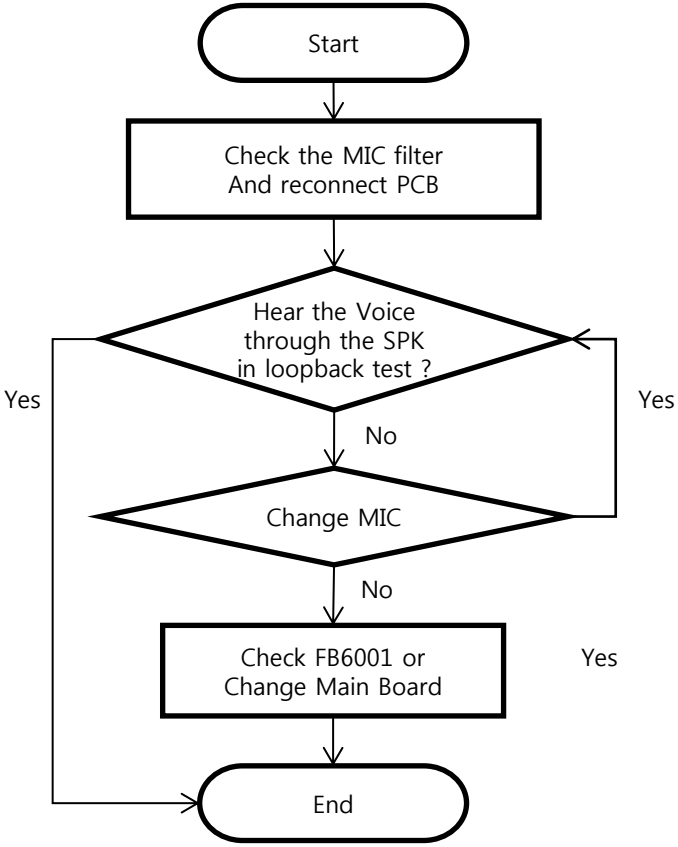

<Sub MIC>

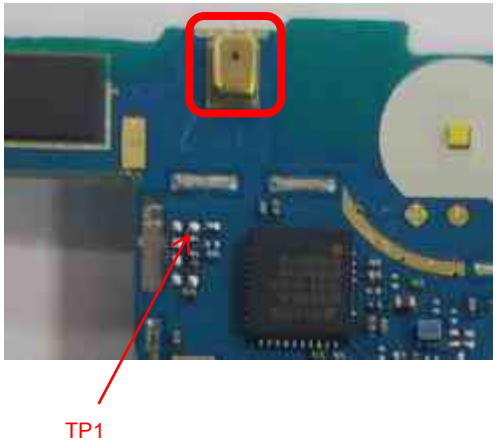

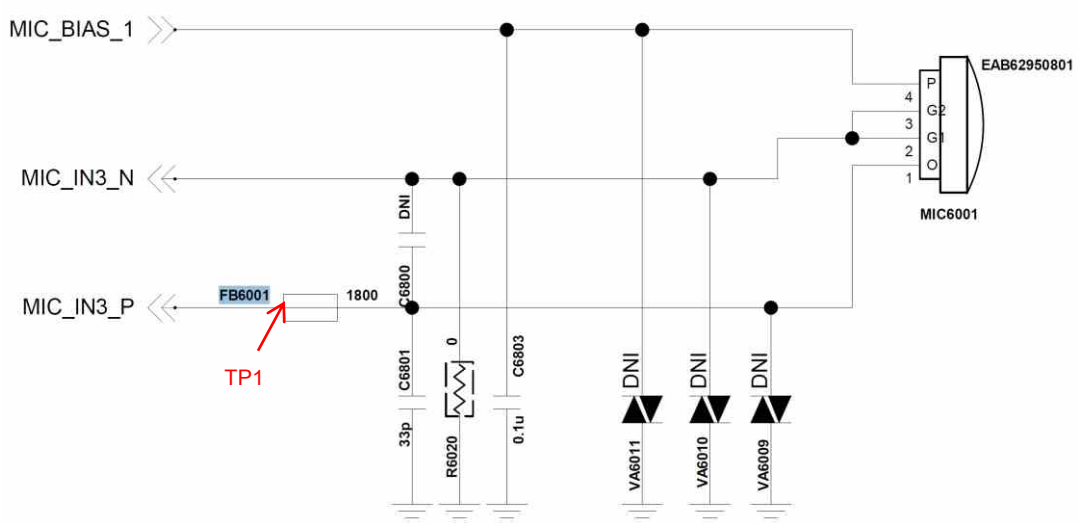

Copyright © 2017 LG Electronics. Inc. All right reserved. Only training and service purposes

3.11.5 Audio Ear MIC Jack

Disable detecting headset insert or No sound from Earphone, Check the Ear Mic.

Checking Flow

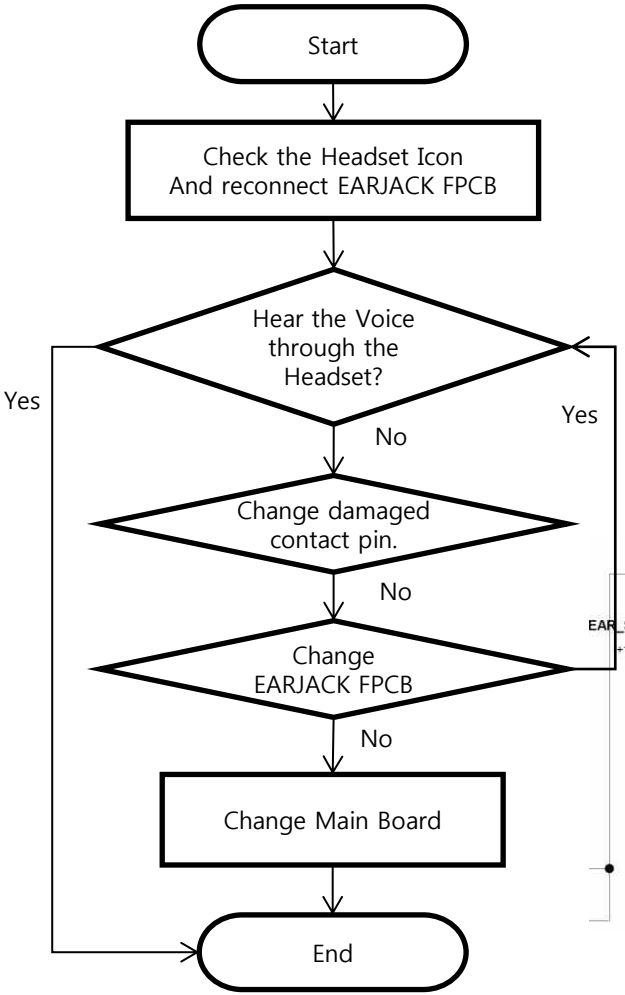

Image

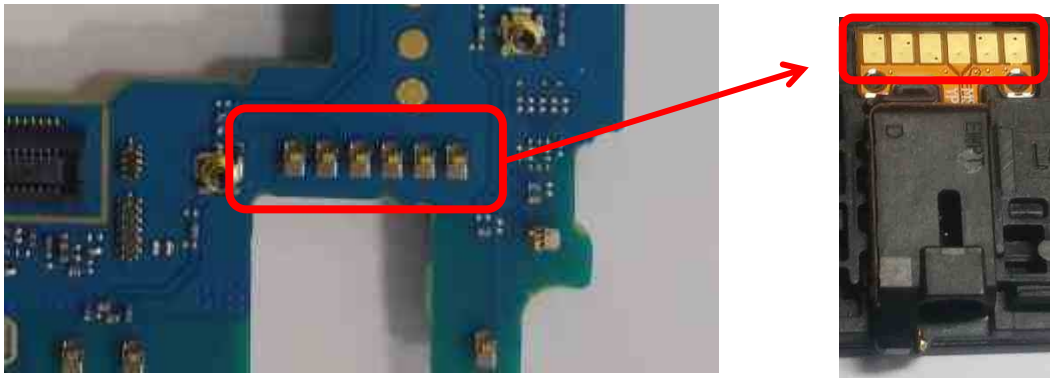

FPCB Image

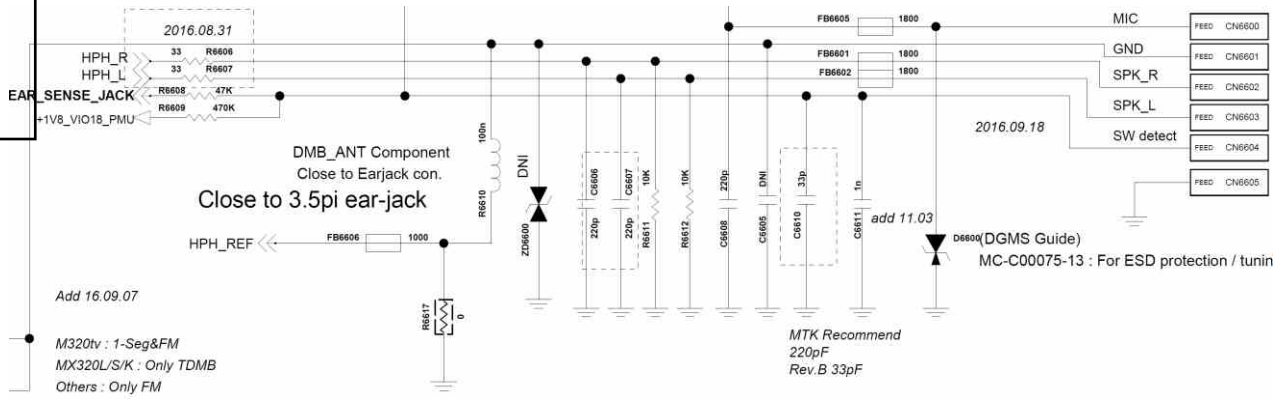

Circuit Diagram

Copyright © 2017 LG Electronics. Inc. All right reserved. Only training and service purposes

When Main display doesn't work well, check CN7100 and TP Voltage.

Checking Flow

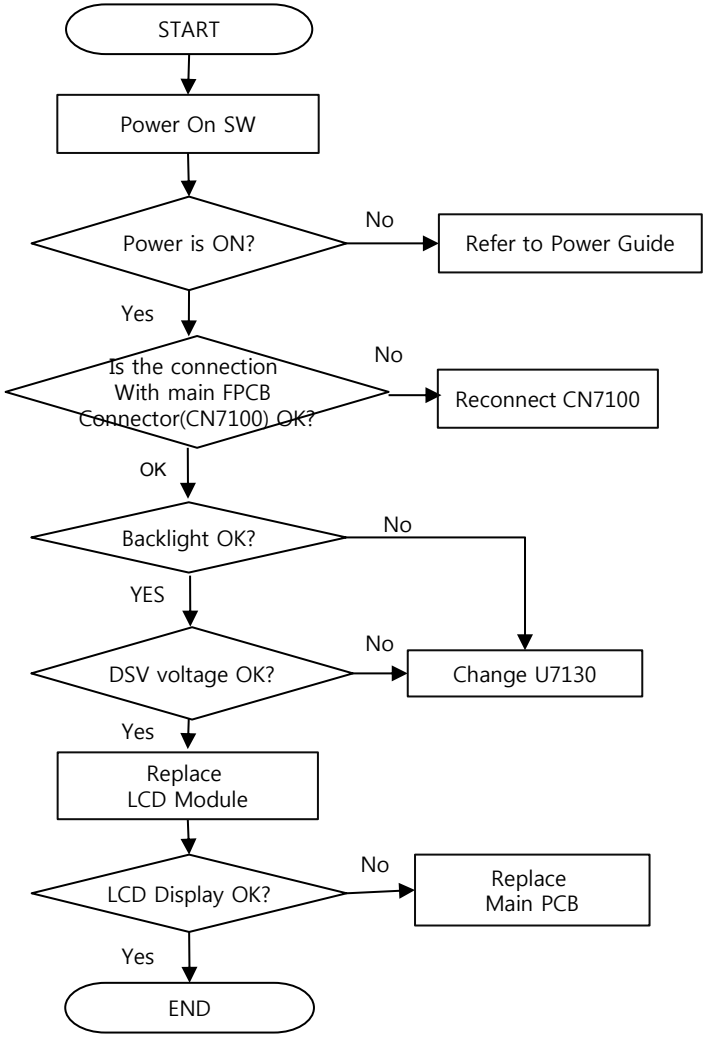

Image

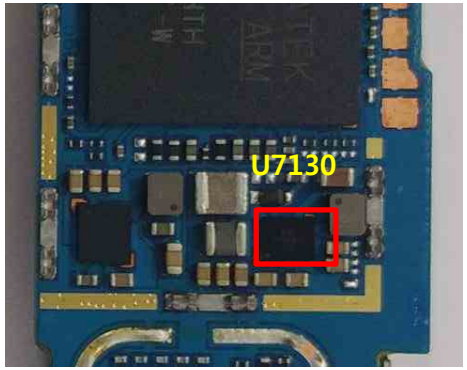

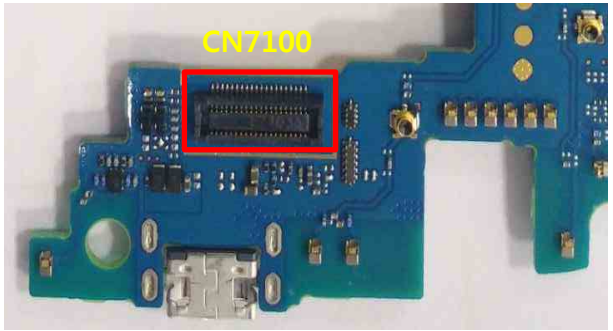

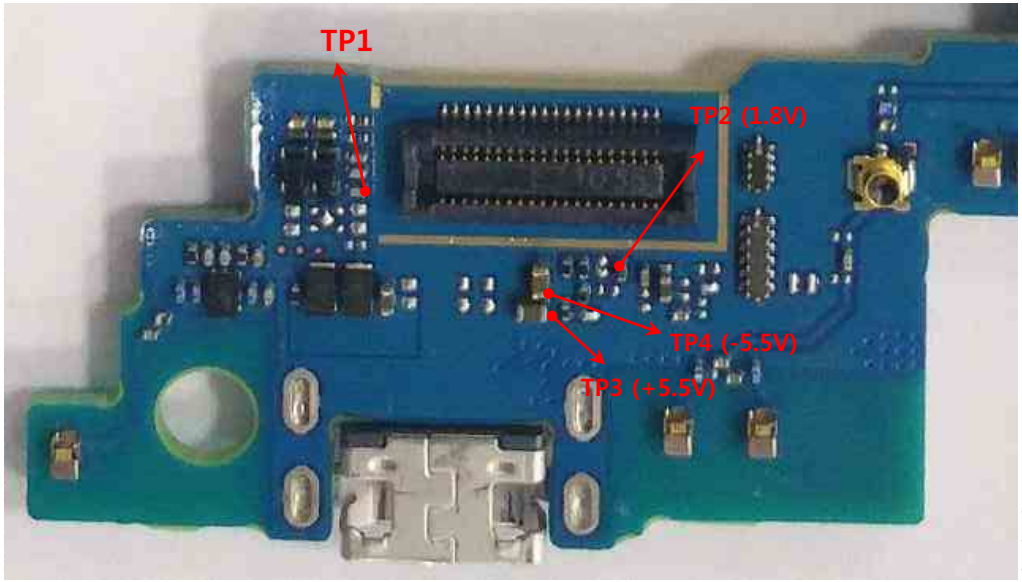

TP1 : LED_A
TP2 : VIO
TP3 : DSV+
TP4 : DSV-

Copyright © 2017 LG Electronics. Inc. All right reserved. Only training and service purposes

3.12 Display

Circuit Diagram

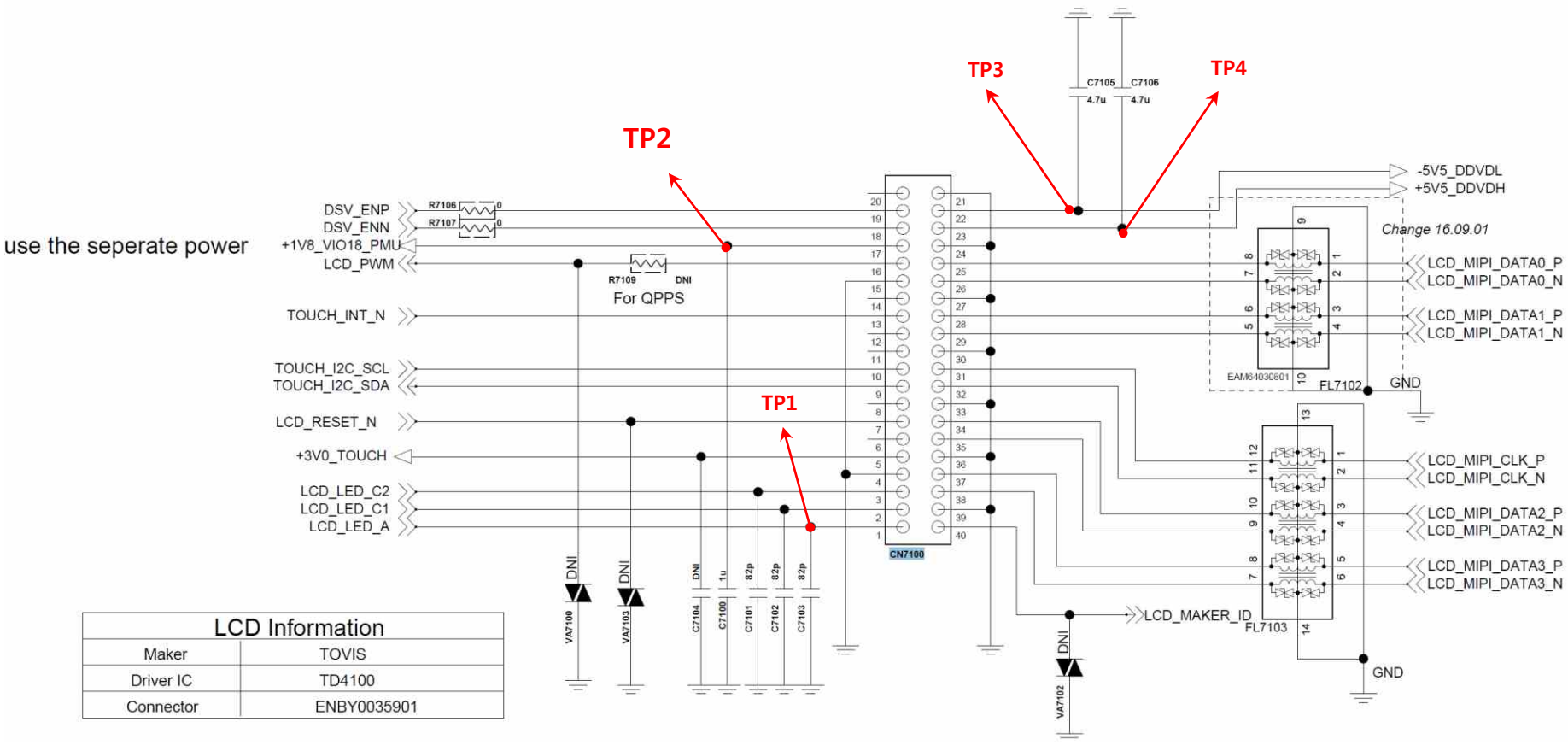

LCD Information	
Maker	TOVIS
Driver IC	TD4100
Connector	ENBY0035901

Copyright © 2017 LG Electronics. Inc. All right reserved. Only training and service purposes

3.13.1 13M Rear camera

When 13M Rear Camera doesn't work, check CN7304 and TP Voltage.

Checking Flow

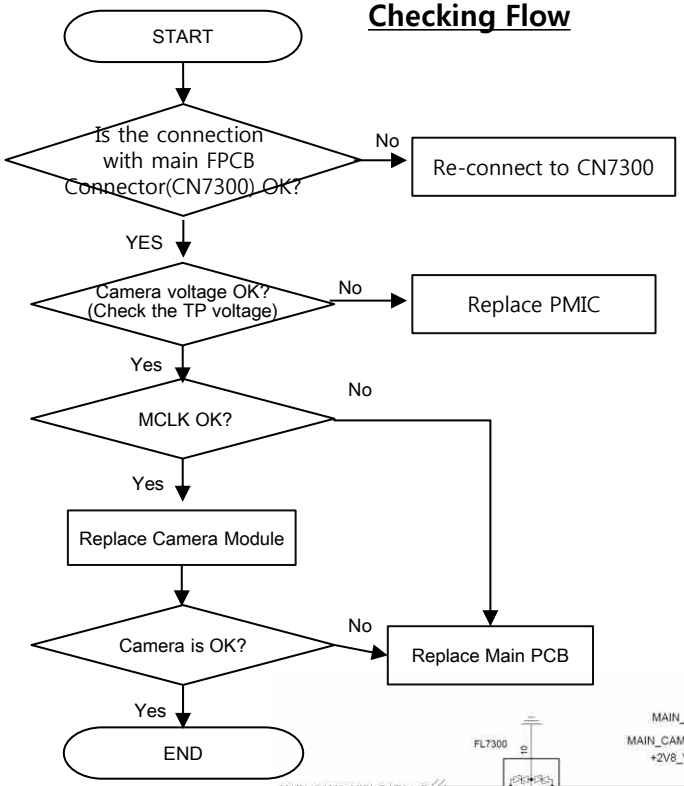

TP1 : VCM
TP2 : DVDD
TP3 : VIO
TP4 : AVDD

Image

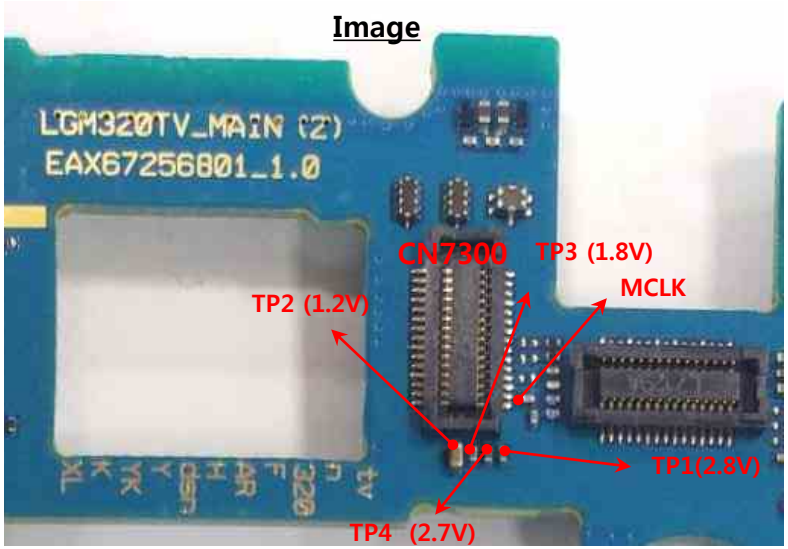

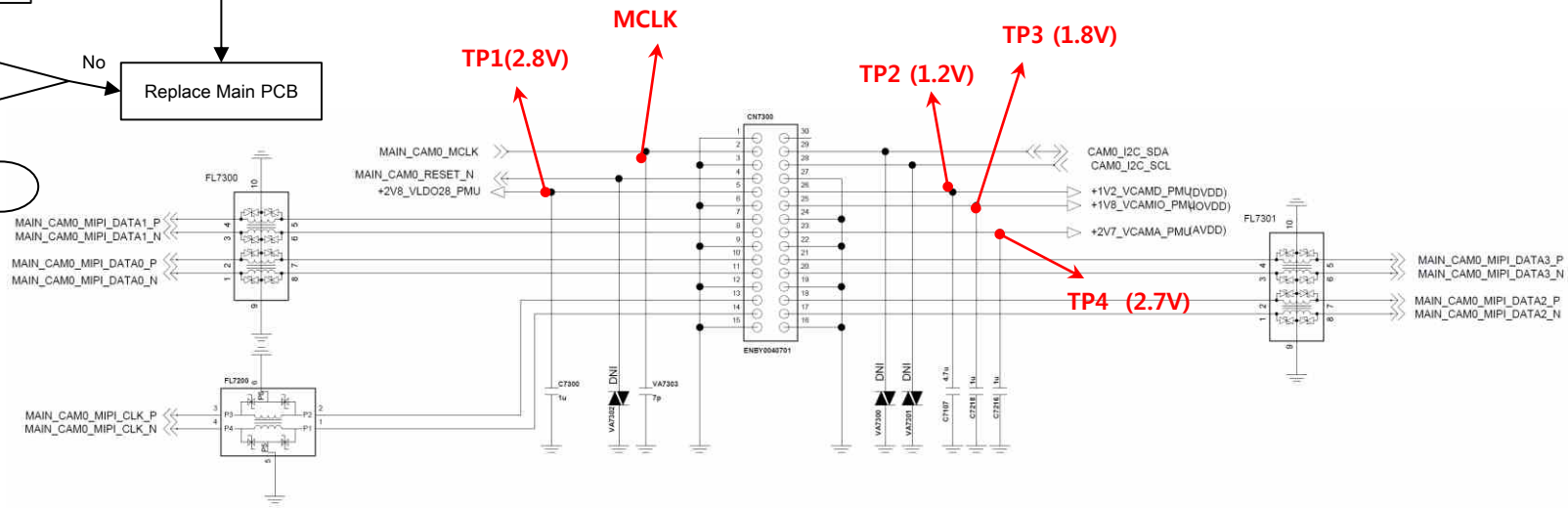

Copyright © 2017 LG Electronics. Inc. All right reserved. Only training and service purposes

When 5M Front camera is not working, check CN7301 and TP Voltage.

Checking Flow

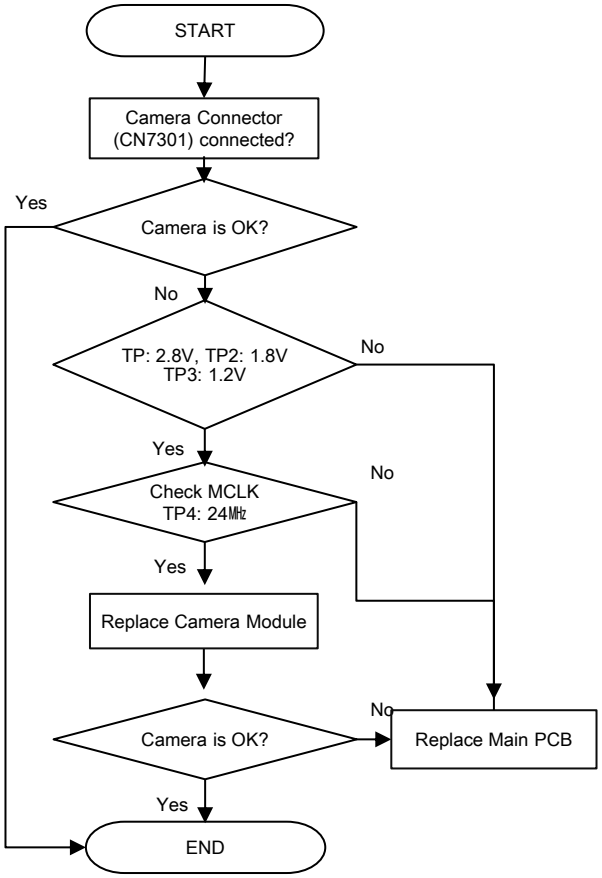

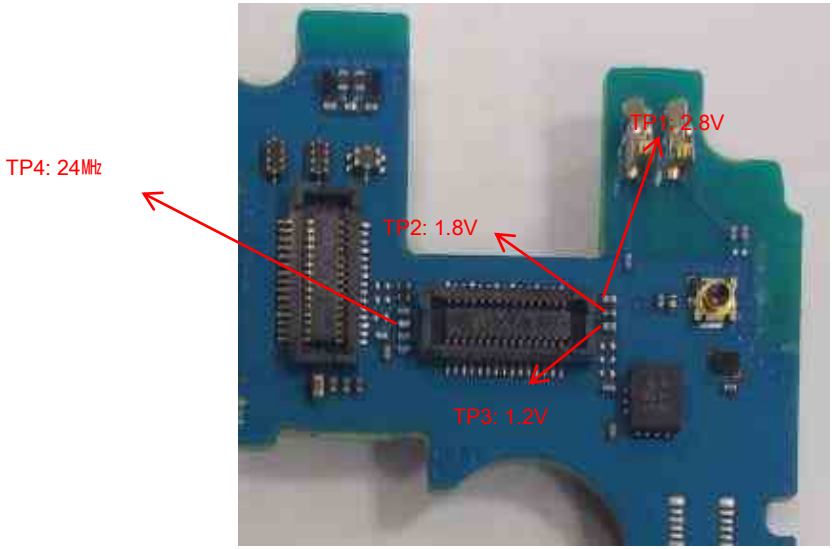

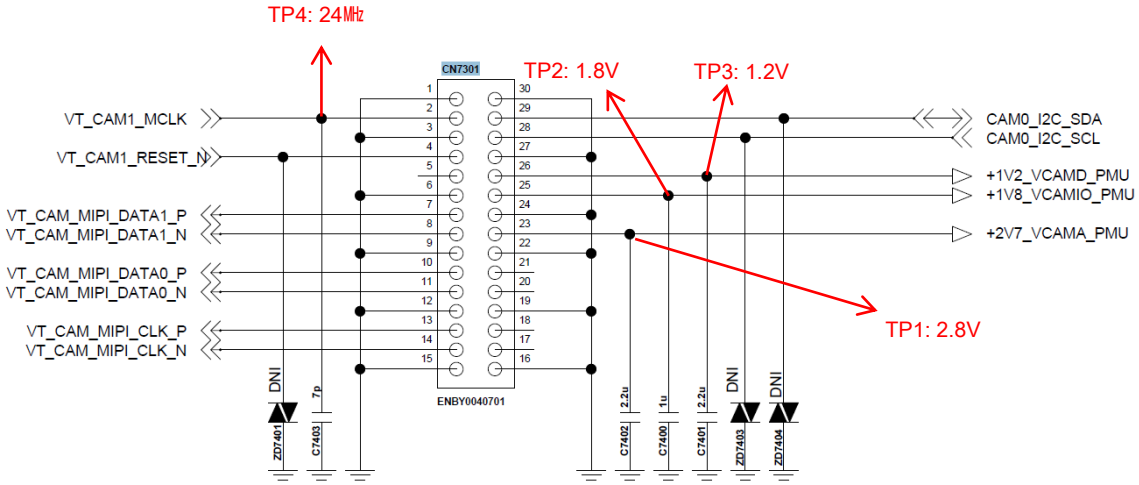

Copyright © 2017 LG Electronics. Inc. All right reserved. Only training and service purposes

Motor is not working

Checking Flow

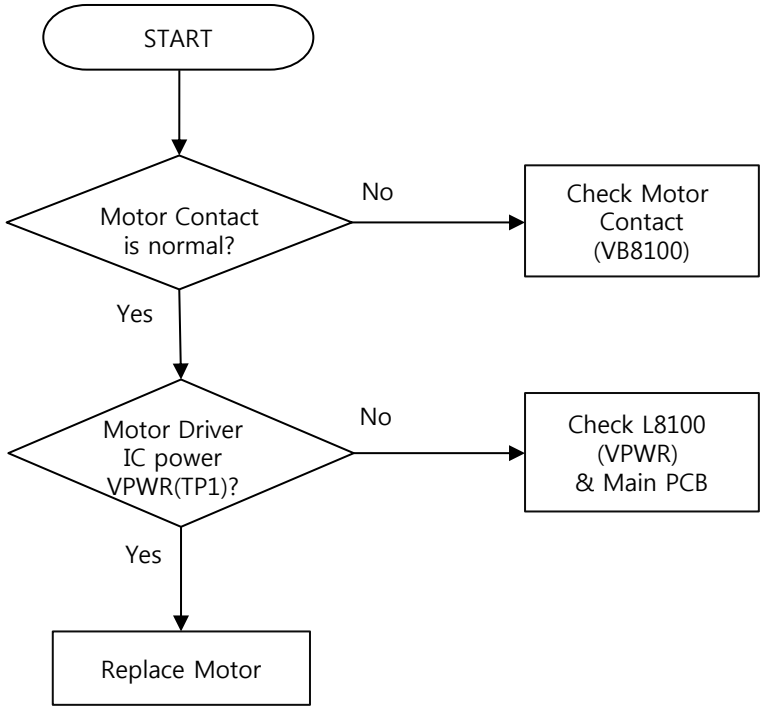

Image

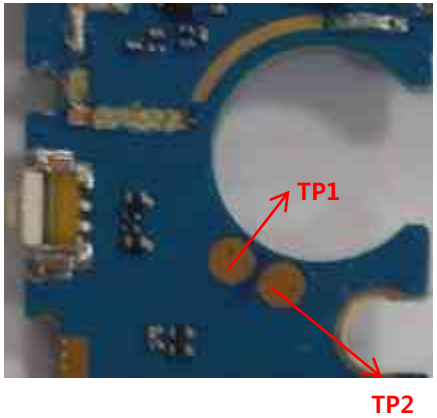

Circuit Diagram

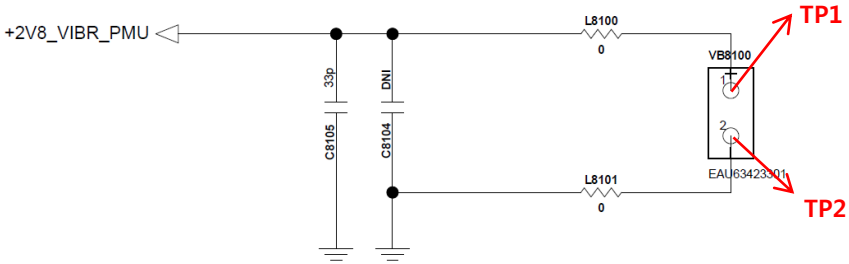

Copyright © 2017 LG Electronics. Inc. All right reserved. Only training and service purposes

3.15.1 Sensor – Proximity(case1)

When LCD ON/OFF is not working automatically check proximity sensor.

Checking Flow

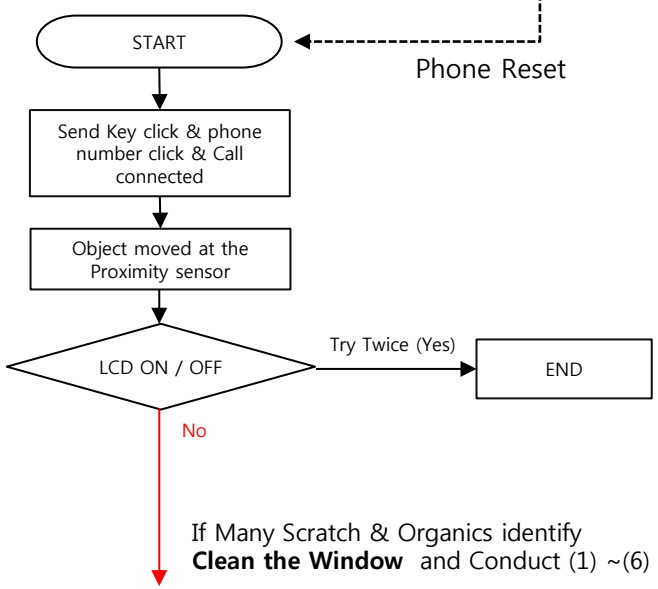

If Many Scratch & Organics identify **Clean the Window** and Conduct (1) ~(6)

1. Hidden Menu Start

- Start shortcut key : *#546368#*320#
- Hidden Menu List : Choose Device Test

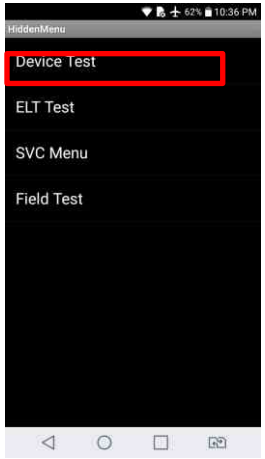

2. Device Test : SAAT choose

Service Menu Tests

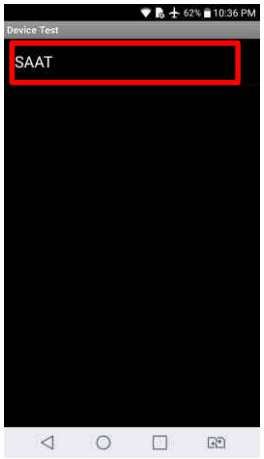

3. Device Test : Service Menu Manual Test

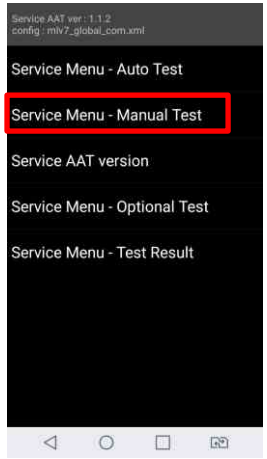

4. Service Menu
: Key Press Test

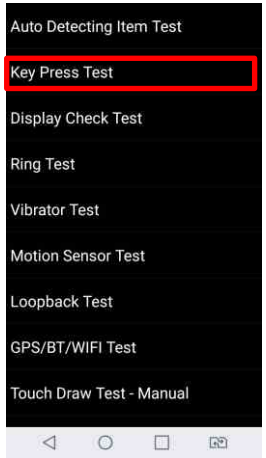

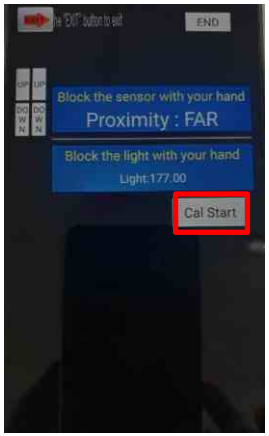

6. After Calibration Progress, Attach your Finger the Proximity Operation Near ← → Far Check!

5. Choose
: Calibration start

Copyright © 2017 LG Electronics. Inc. All right reserved. Only training and service purposes

3.15.1 Sensor – Proximity(case2)

When LCD ON/OFF is not working automatically check proximity sensor.

Checking Flow

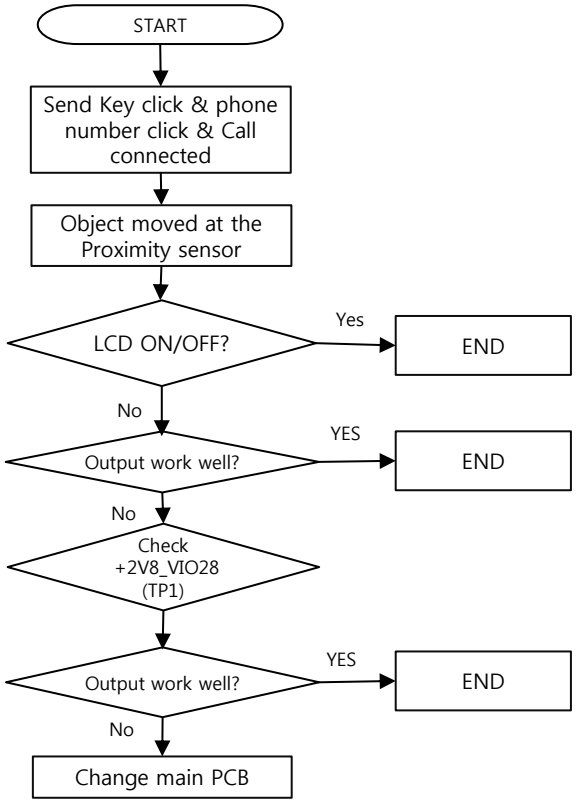

Image

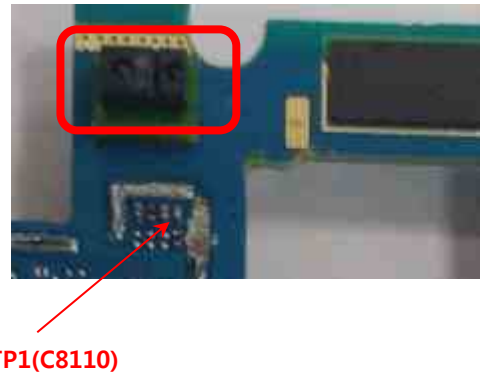

Circuit Diagram

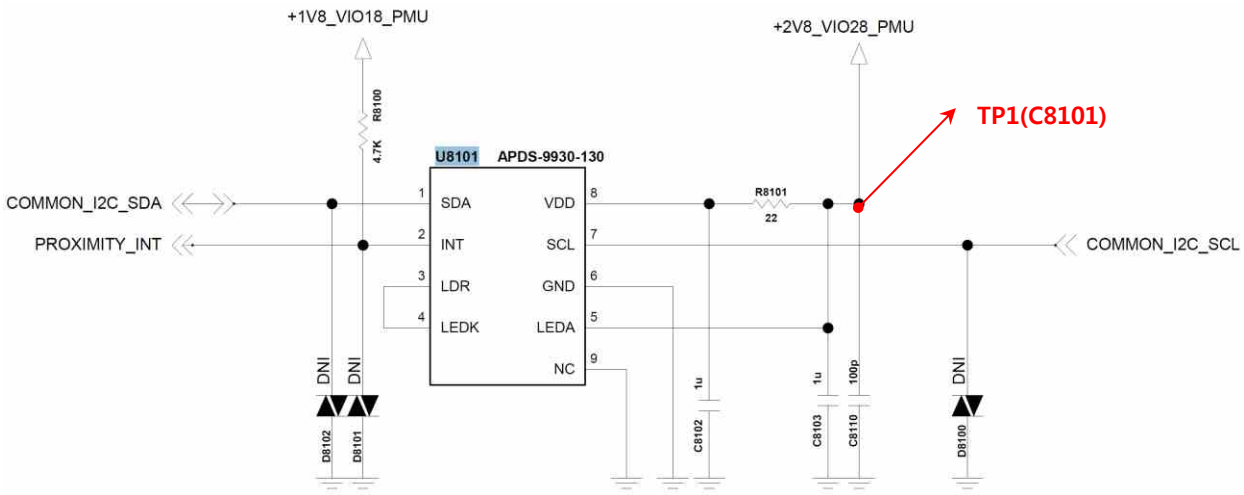

Copyright © 2017 LG Electronics. Inc. All right reserved. Only training and service purposes

3.15.2 Sensor – acceleration

The Accl. is calibrated by using SW algorithm.

Checking Flow

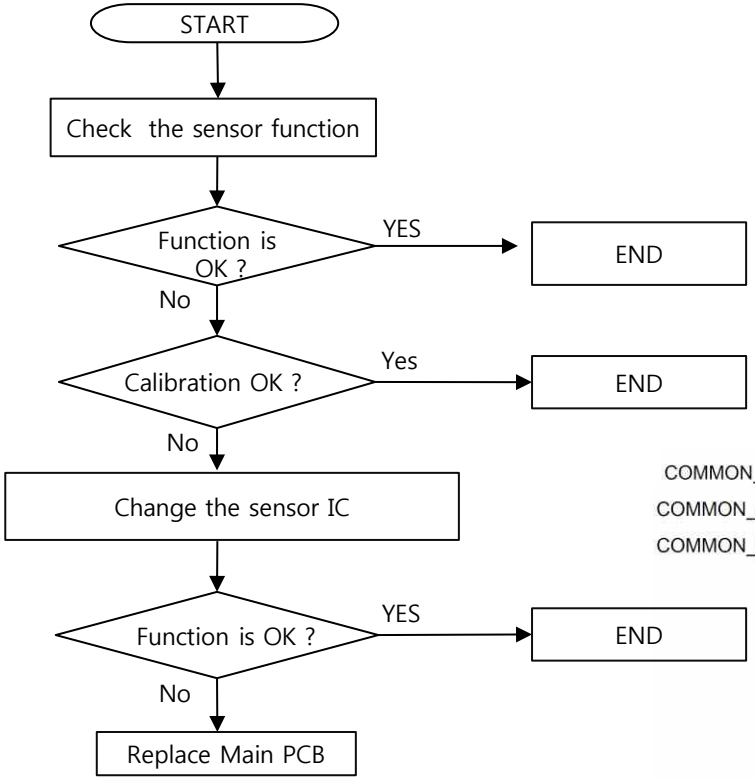

Image

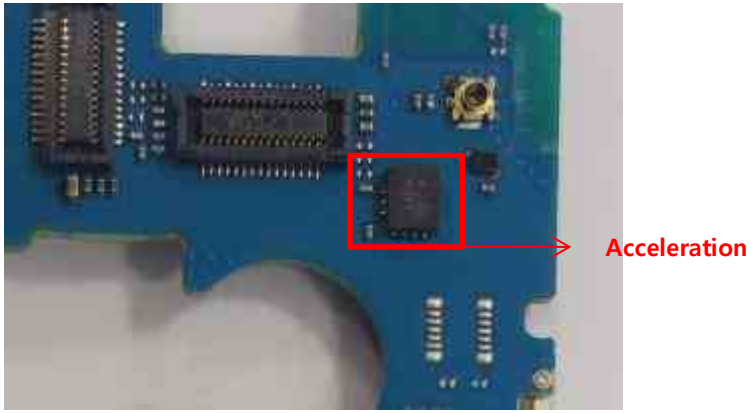

Circuit Diagram

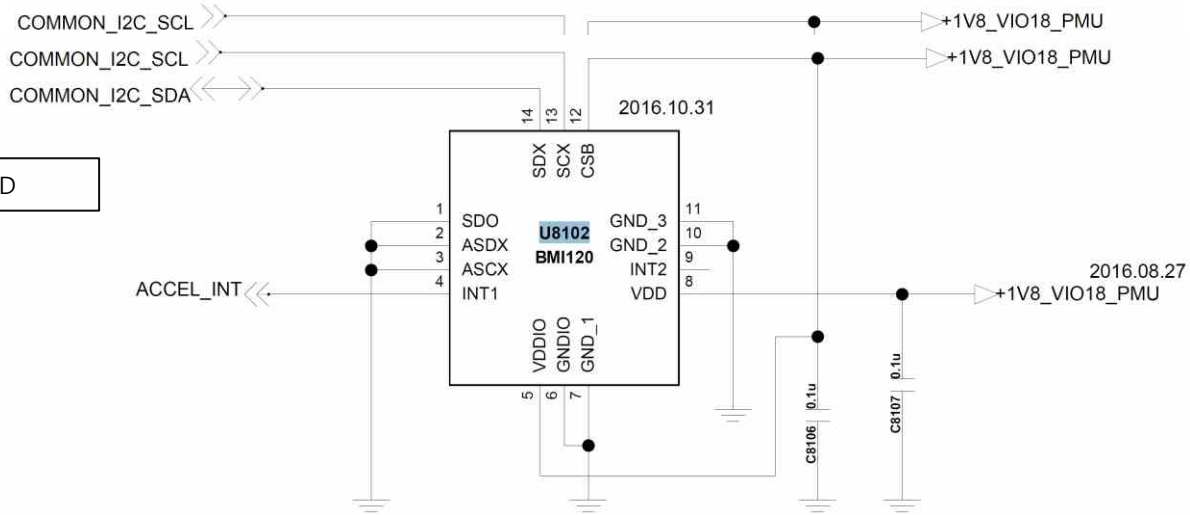

Copyright © 2017 LG Electronics. Inc. All right reserved. Only training and service purposes

3.15.3 Sensor – Geomagnetic

Checking Flow

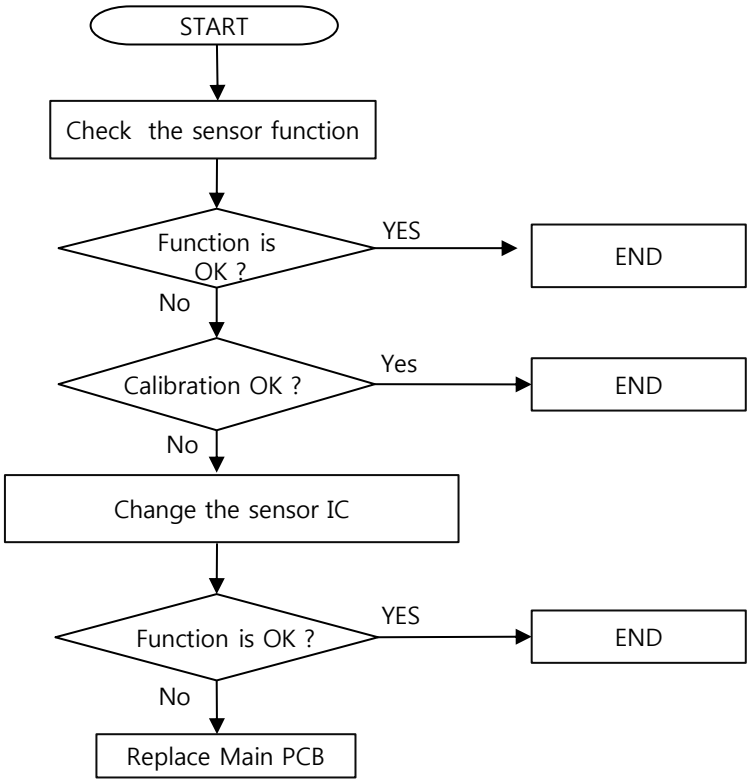

Image

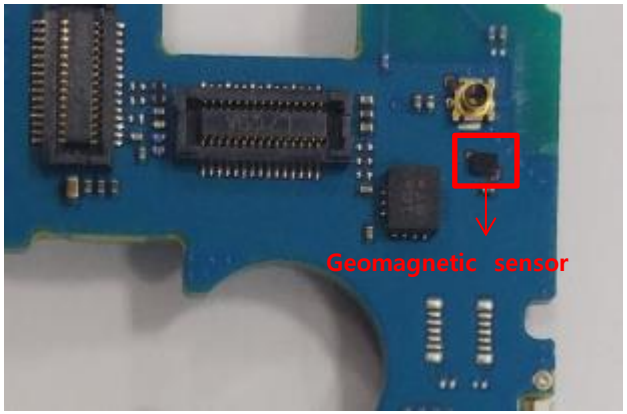

Circuit Diagram

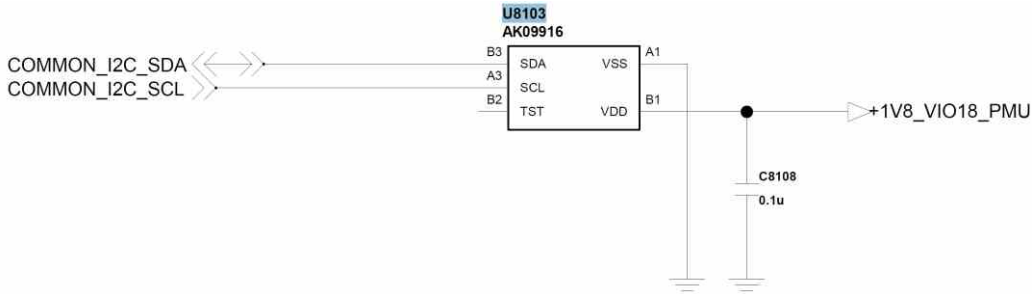

Copyright © 2017 LG Electronics. Inc. All right reserved. Only training and service purposes

I/O USB connector is for data transportation and charging battery. (Please refer to charge page about charging)

Checking Flow

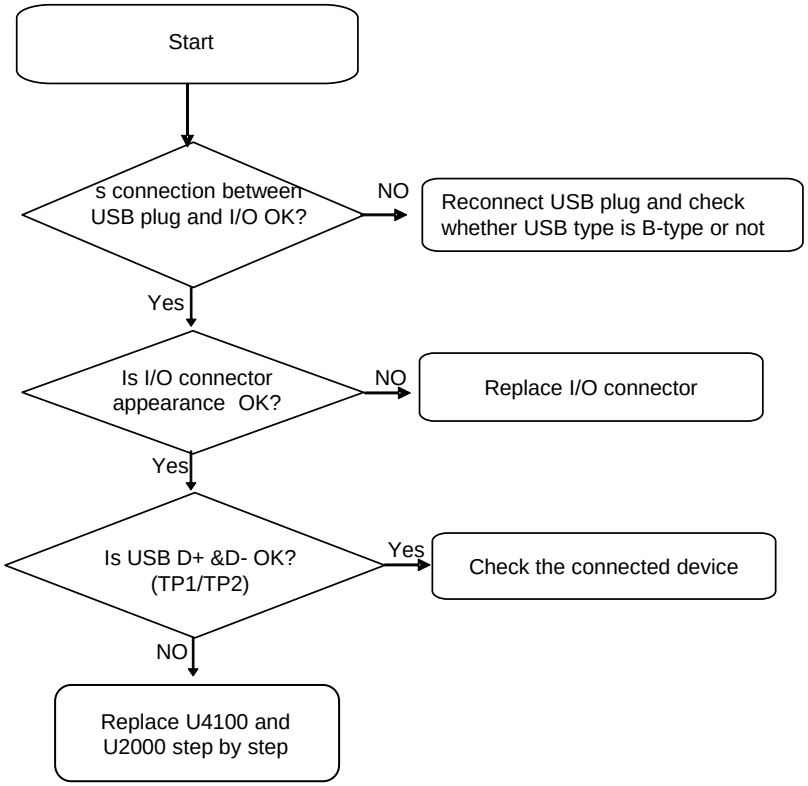

Image

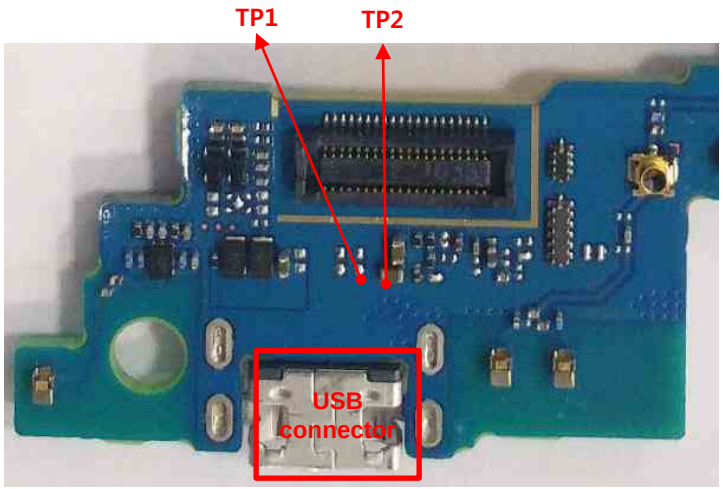

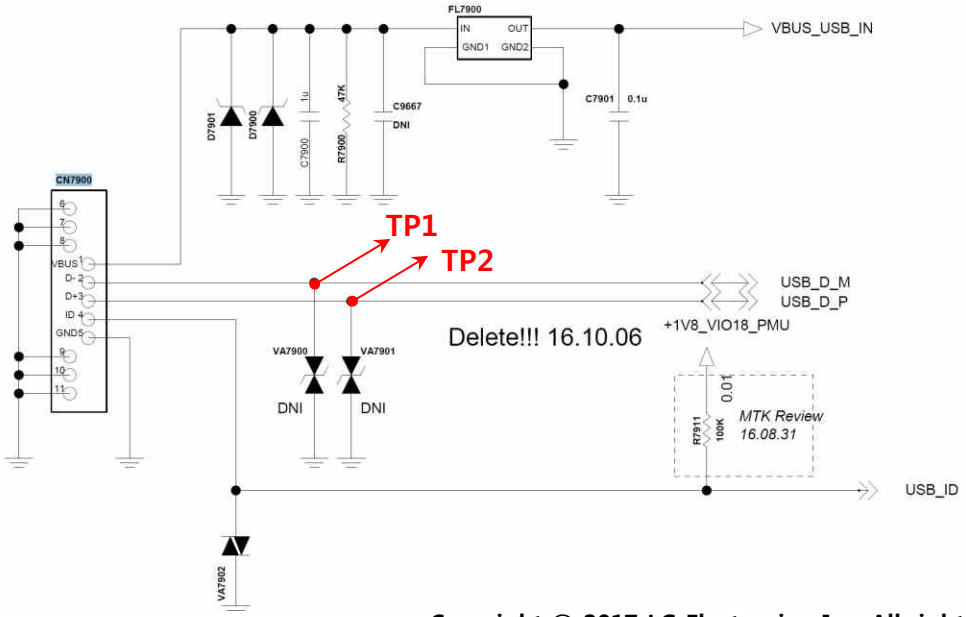

Copyright © 2017 LG Electronics. Inc. All right reserved. Only training and service purposes

4. Block Diagram

4-1 Total

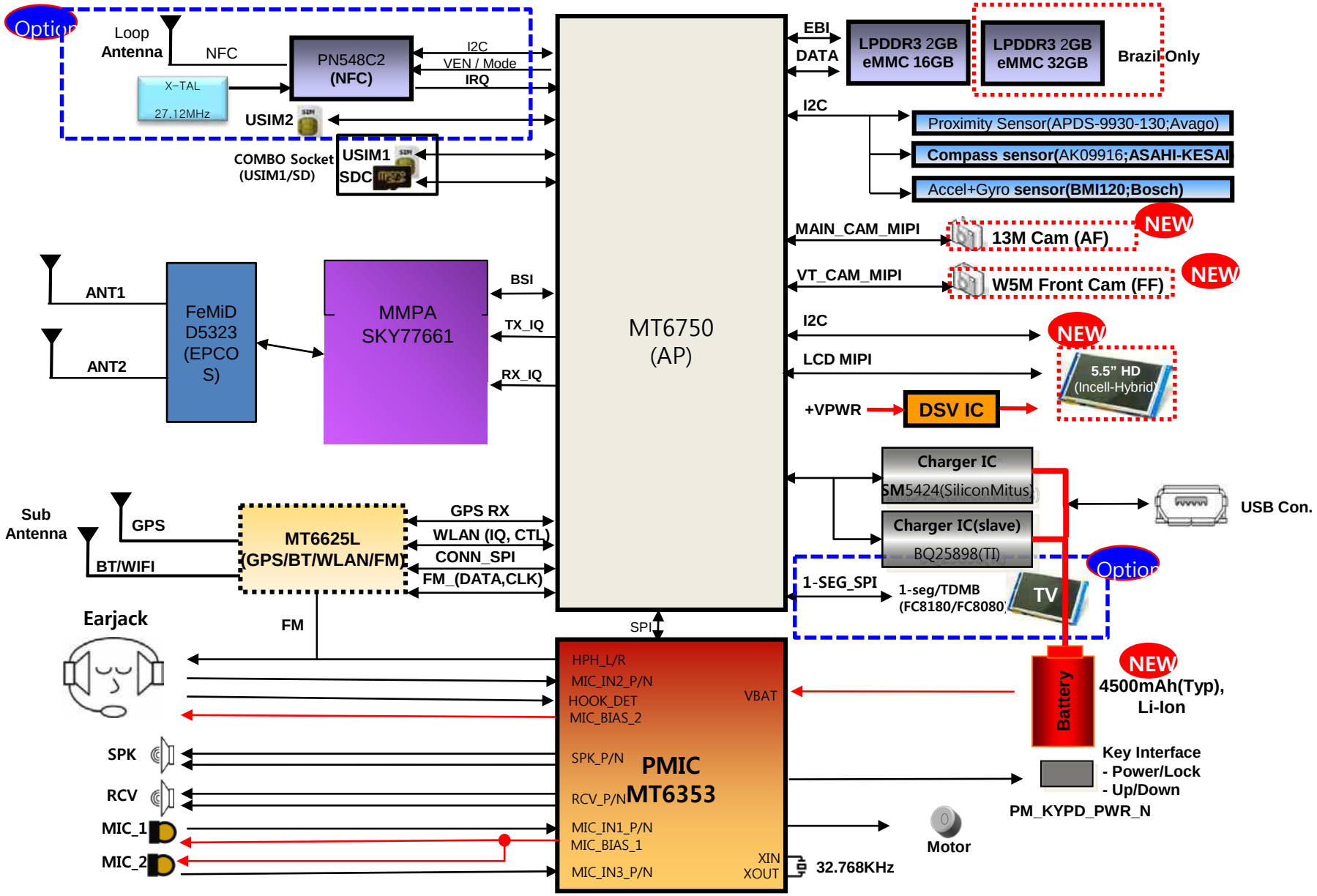

4-2 RF part

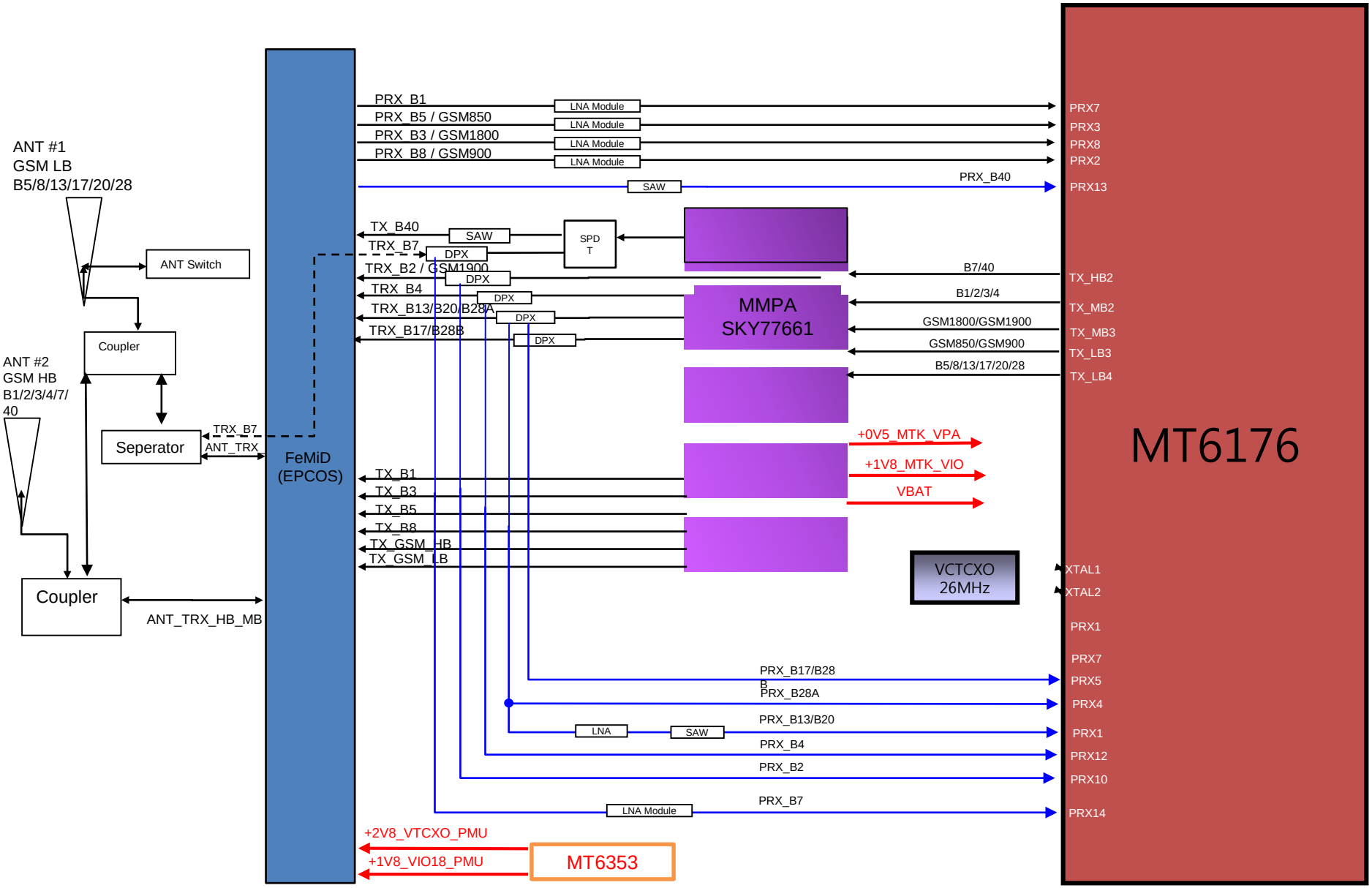
ANT #1
GSM LB
B5/8/13/17/20/28
ANT Switch
Coupler
ANT #2
GSM HB
B1/2/3/4/7/
40
Seperator
TRX_B7
ANT_TRX
Coupler
ANT_TRX_HB_MB
FeMiD
(EPCOS)
PRX_B1
PRX_B5 / GSM850
PRX_B3 / GSM1800
PRX_B8 / GSM900
LNA Module
SAW
PRX_B40
TX_B40
TRX_B7
TRX_B2 / GSM1900
TRX_B4
TRX_B13/B20/B28A
TRX_B17/B28B
DPX
SPD
T
MMPA
SKY77661
B7/40
B1/2/3/4
GSM1800/GSM1900
GSM850/GSM900
B5/8/13/17/20/28
+0V5_MTK_VPA
+1V8_MTK_VIO
VBAT
TX_B1
TX_B3
TX_B5
TX_B8
TX_GSM_HB
TX_GSM_LB
VCTCXO
26MHz
PRX_B17/B28
B
PRX_B28A
PRX_B13/B20
LNA
PRX_B4
PRX_B2
PRX_B7
+2V8_VTCXO_PMU
+1V8_VIO18_PMU
MT6353
MT6176
PRX7
PRX3
PRX8
PRX2
PRX13
TX_HB2
TX_MB2
TX_MB3
TX_LB3
TX_LB4
XTAL1
XTAL2
PRX1
PRX7
PRX5
PRX4
PRX1
PRX12
PRX10
PRX14

4. Block Diagram

4-2 RF Part : DRX&GPS, BT, WiFI

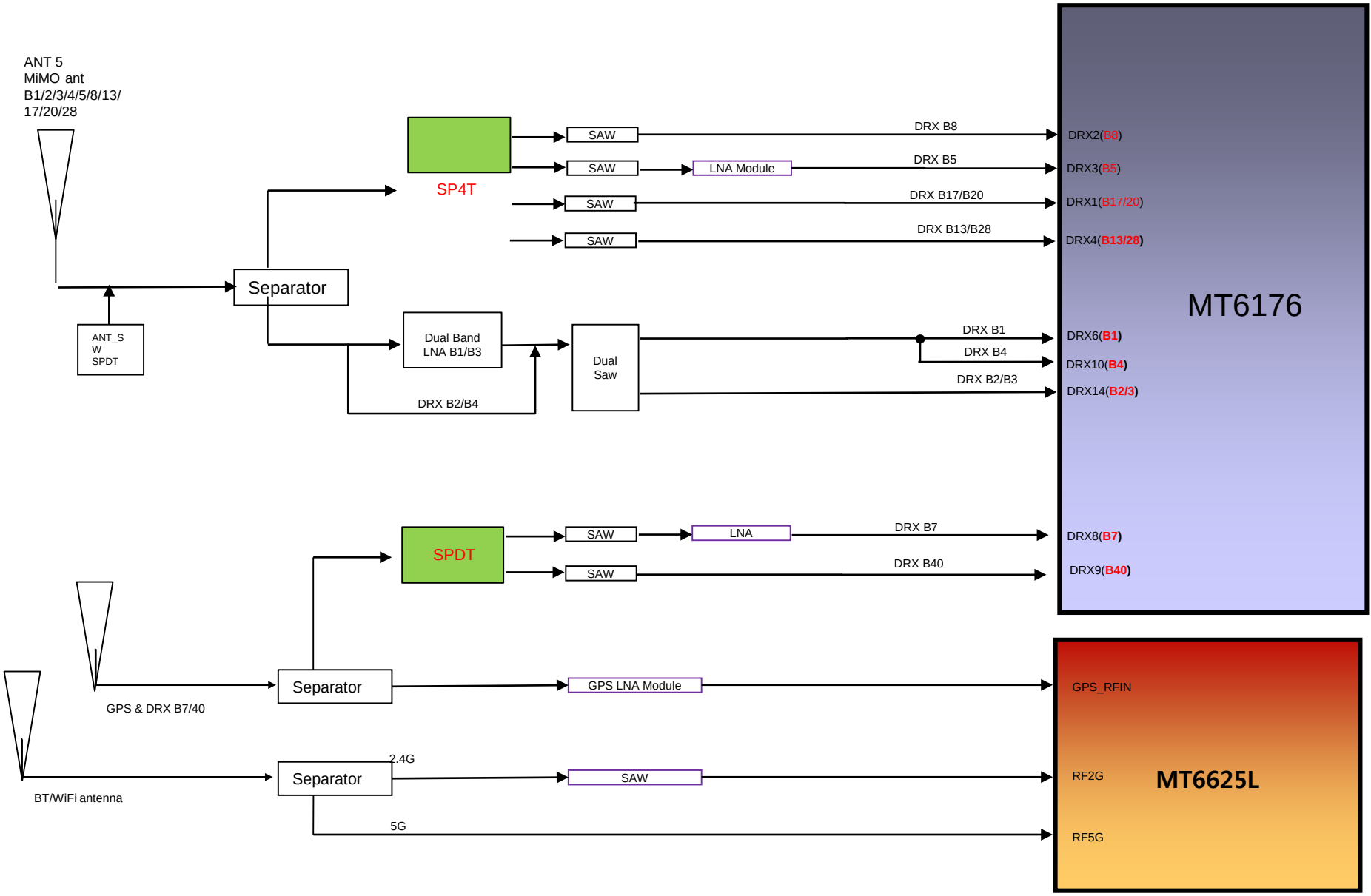

4-3 Connectivity Part : FM, DTV

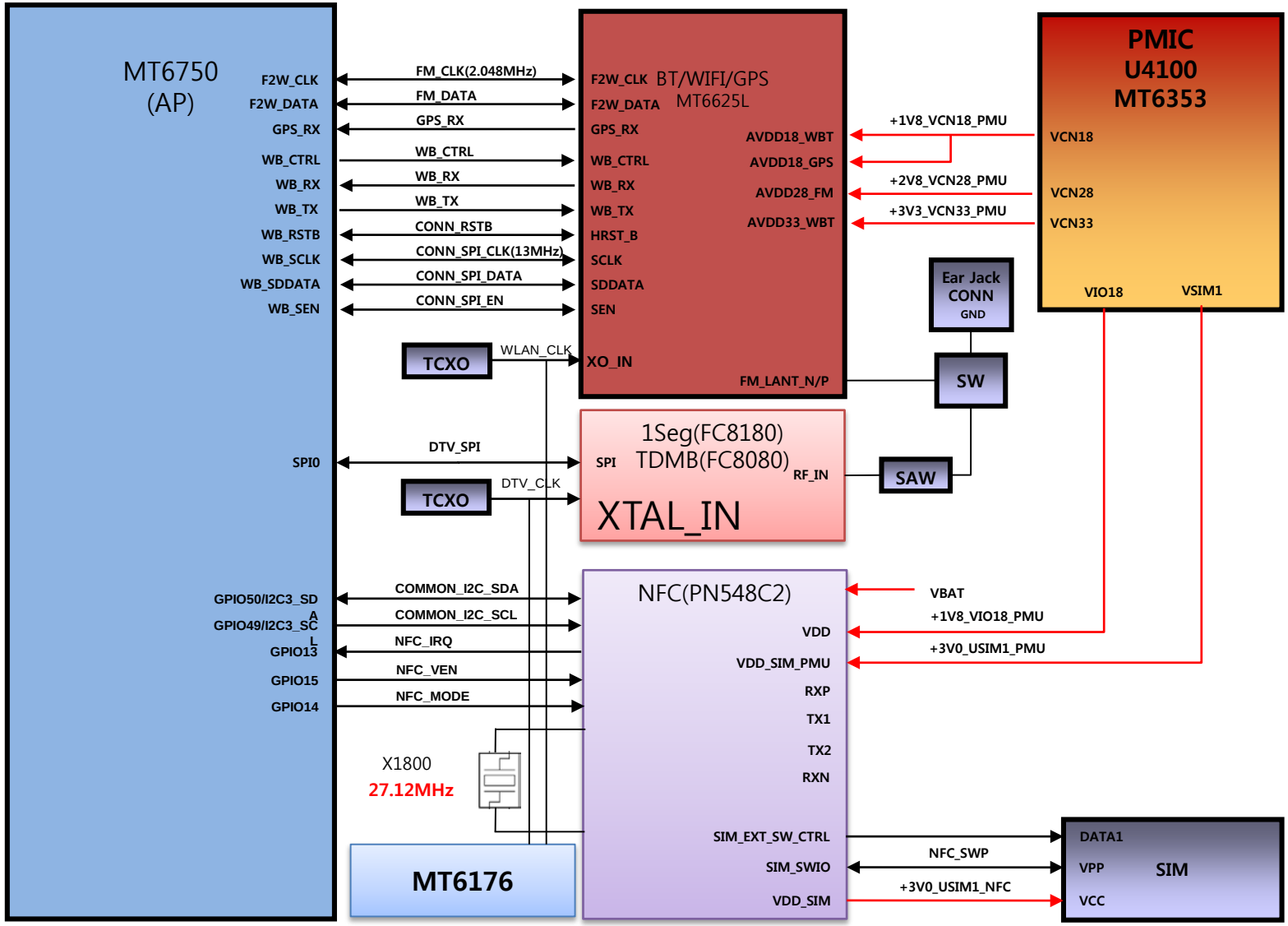

4. Block Diagram

LGE Internal Use Only

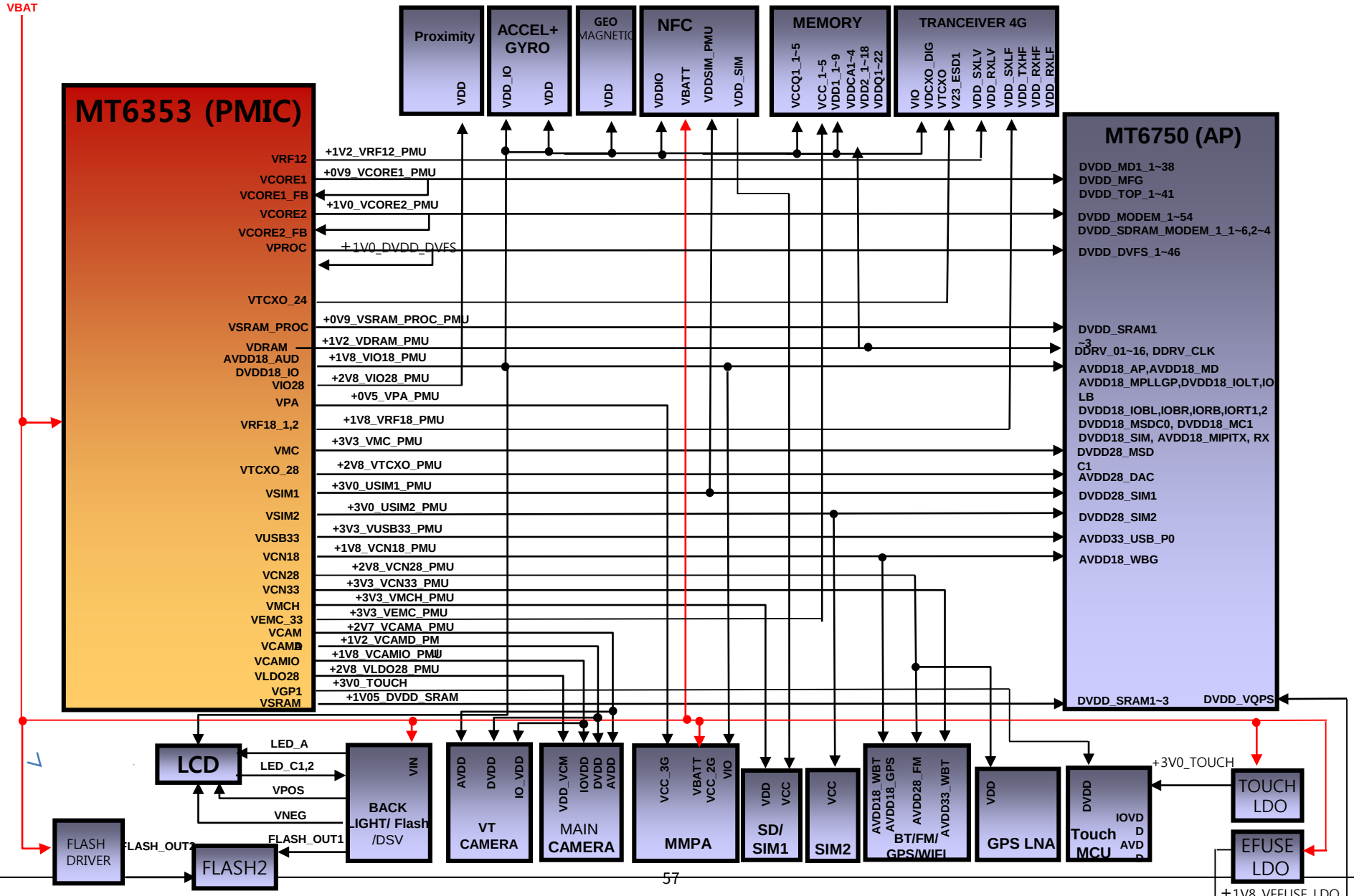

Be First, Do it Right, Work Smart!

4. Block Diagram

LGE Internal Use Only

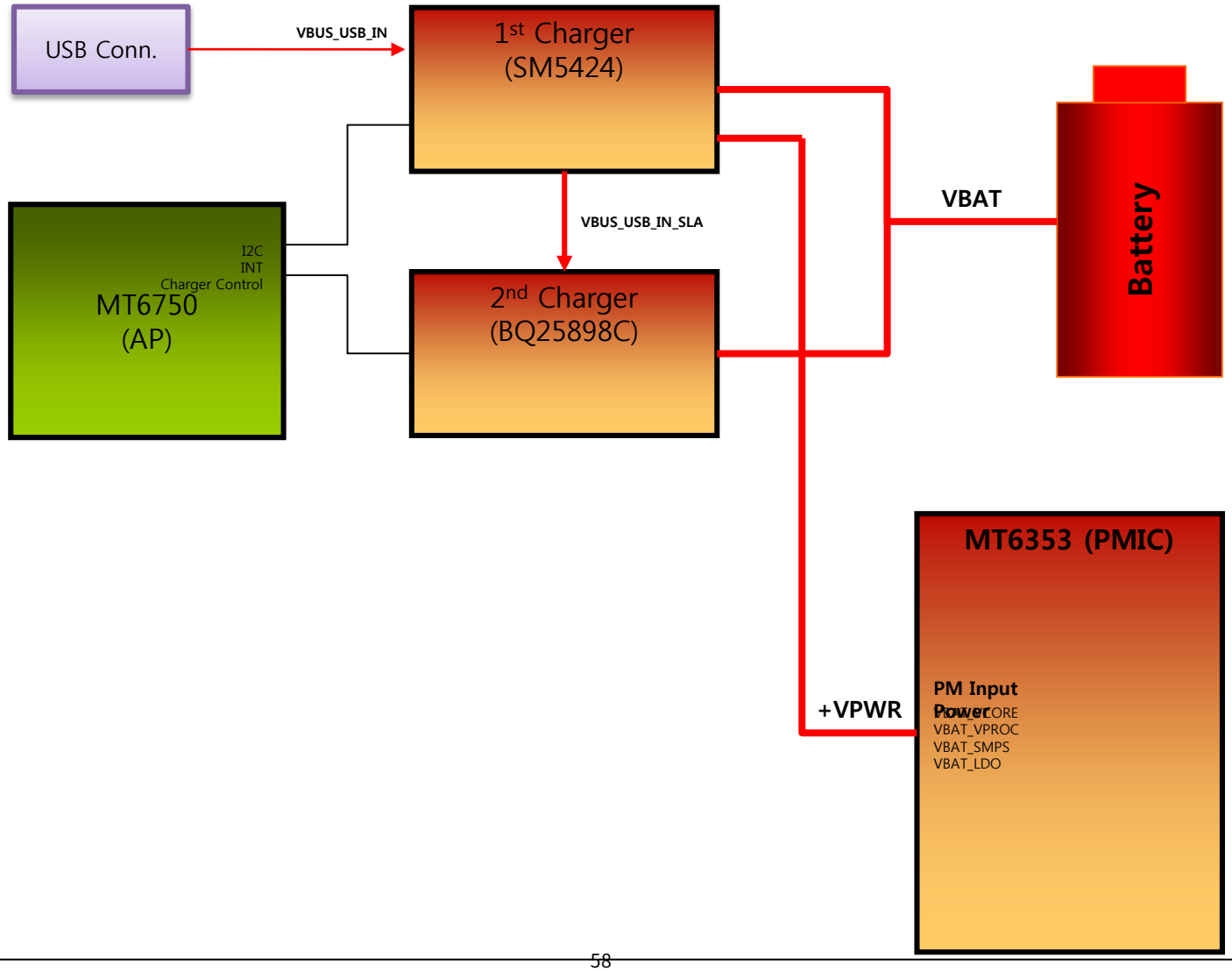

Be First, Do it Right, Work Smart!

4-5 Memory / Micro SD / USIM1 & USIM2

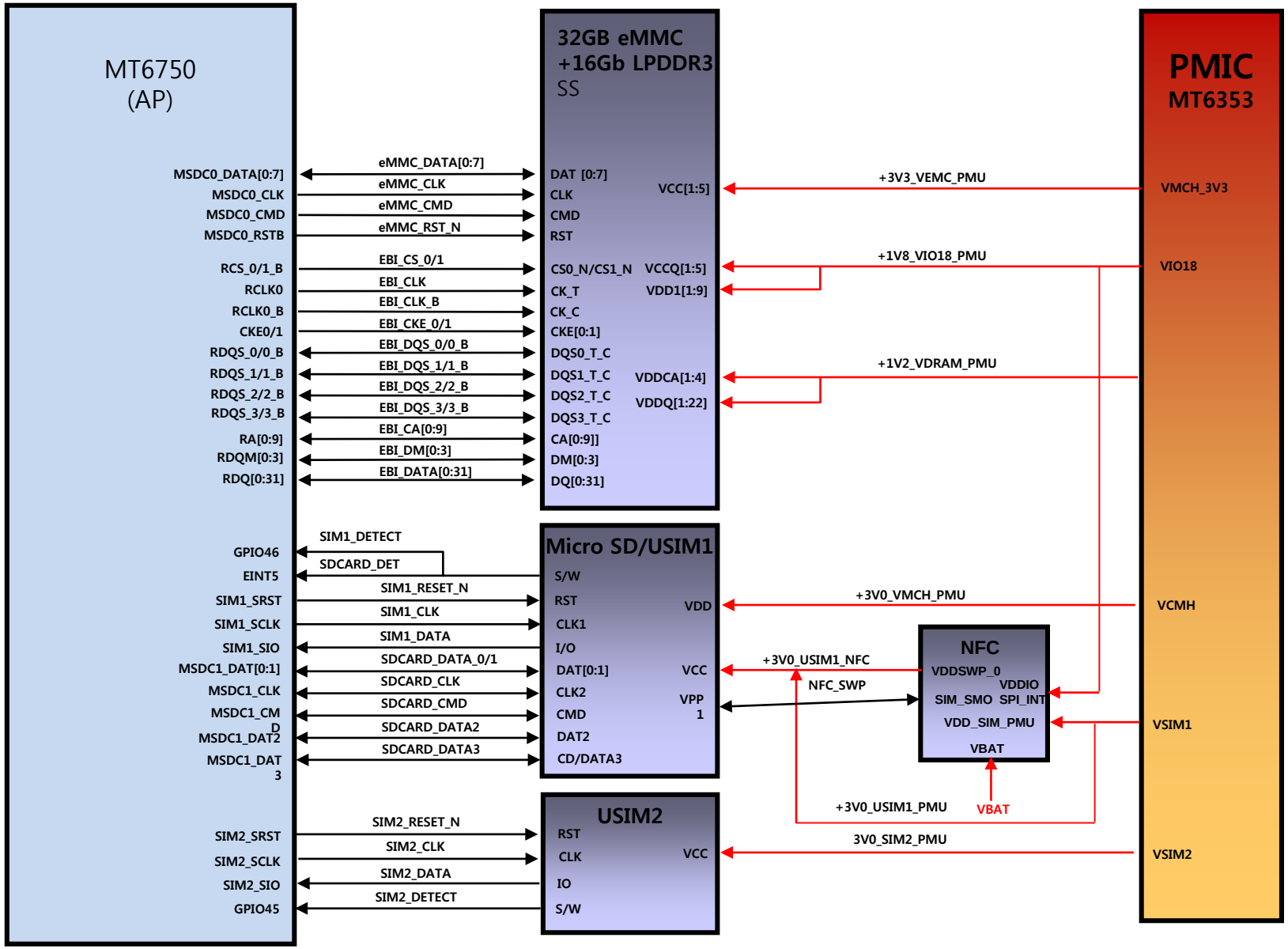

4-6 LCD / Main CAM / VT CAM

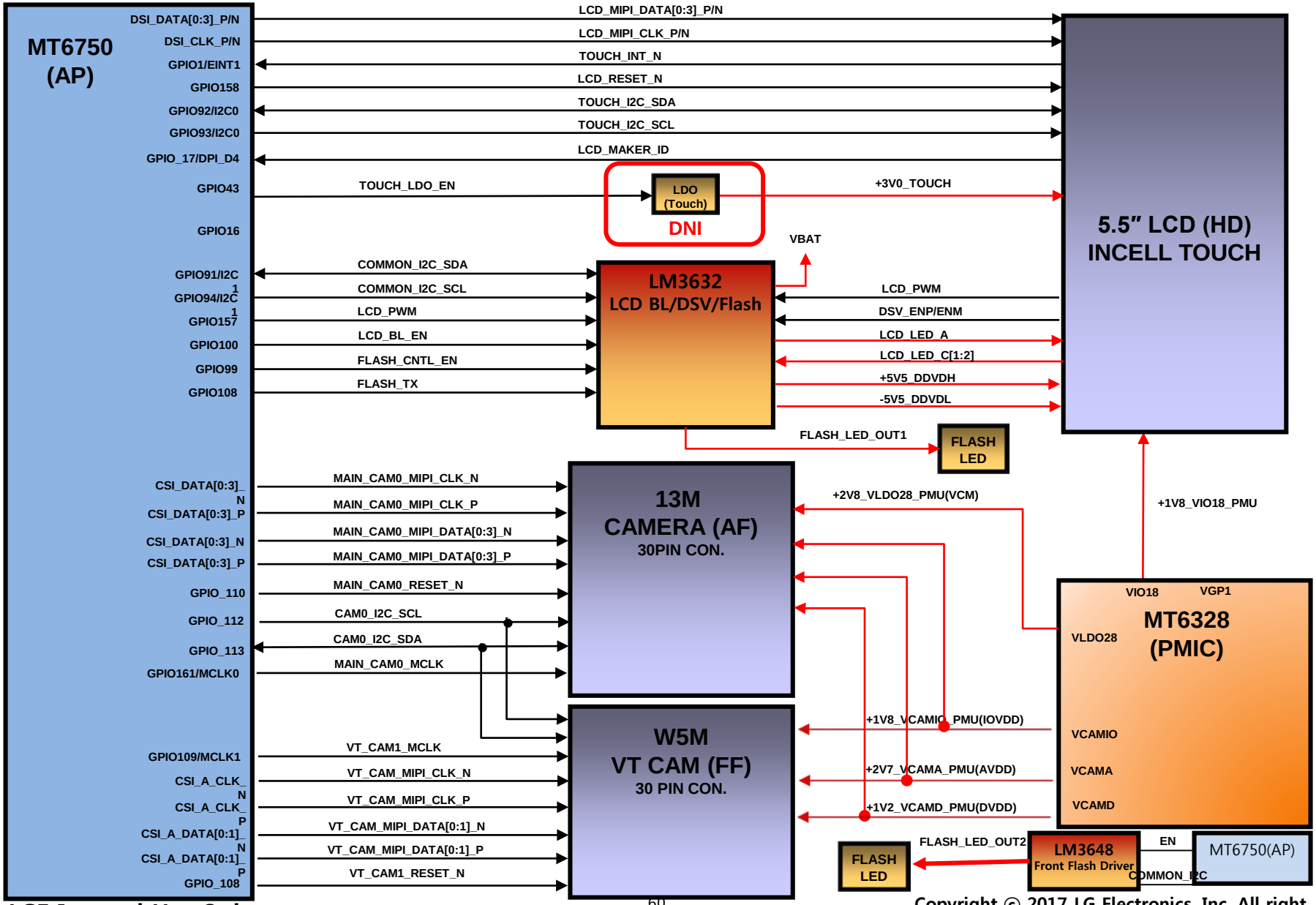

Copyright © 2017 LG Electronics. Inc. All right reserved. Only training and service purposes

4-7 Audio

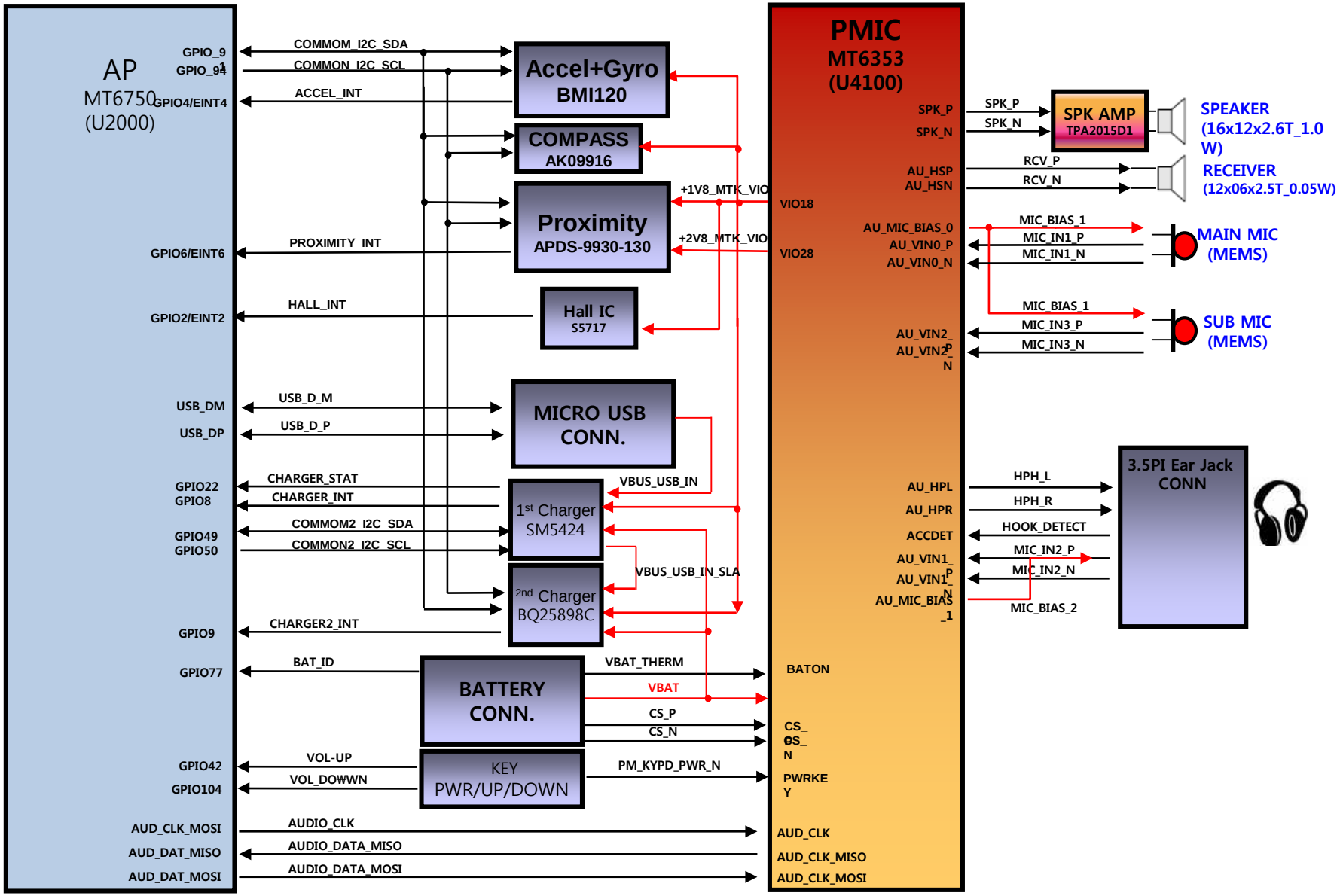
AP
MT6750
(U2000)
GPIO_9
GPIO_94
GPIO4/EINT4
GPIO6/EINT6
GPIO2/EINT2
USB_DM
USB_DP
GPIO22
GPIO8
GPIO49
GPIO50
GPIO9
GPIO77
GPIO42
GPIO104
AUD_CLK_MOSI
AUD_DAT_MISO
AUD_DAT_MOSI
COMMOM_I2C_SDA
COMMON_I2C_SCL
ACCEL_INT
PROXIMITY_INT
HALL_INT
USB_D_M
USB_D_P
CHARGER_STAT
CHARGER_INT
COMMOM2_I2C_SDA
COMMON2_I2C_SCL
CHARGER2_INT
BAT_ID
VOL-UP
VOL_DOWN
AUDIO_CLK
AUDIO_DATA_MISO
AUDIO_DATA_MOSI
Accel+Gyro
BMI120
COMPASS
AK09916
Proximity
APDS-9930-130
Hall IC
S5717
MICRO USB
CONN.
1st Charger
SM5424
2nd Charger
BQ25898C
BATTERY
CONN.
KEY
PWR/UP/DOWN
+1V8_MTK_VIO
+2V8_MTK_VIO
VBUS_USB_IN
VBUS_USB_IN_SLA
VBAT_THERM
VBAT
CS_P
CS_N
PM_KYPD_PWR_N
PMIC
MT6353
(U4100)
SPK_P
SPK_N
AU_HSP
AU_HSN
VIO18
AU_MIC_BIAS_0
AU_VIN0_P
AU_VIN0_N
VIO28
AU_VIN2_P
AU_VIN2_N
AU_HPL
AU_HPR
ACCDET
AU_VIN1_P
AU_VIN1_N
AU_MIC_BIAS_1
BATON
CS_P
CS_N
PWRKEY
AUD_CLK
AUD_CLK_MISO
AUD_CLK_MOSI
SPK AMP
TPA2015D1
SPEAKER
(16x12x2.6T_1.0 W)
RCV_P
RCV_N
RECEIVER
(12x06x2.5T_0.05W)
MIC_BIAS_1
MIC_IN1_P
MIC_IN1_N
MAIN MIC
(MEMS)
MIC_IN3_P
MIC_IN3_N
SUB MIC
(MEMS)
HPH_L
HPH_R
HOOK_DETECT
MIC_IN2_P
MIC_IN2_N
MIC_BIAS_2
3.5PI Ear Jack
CONN

CIRCUIT DIAGRAM

Copyright ⓒ 2017 LG Electronics. Inc. All right reserved. Only training and service purposes

< 1-12-1-1-2_xx_ANT > RDK

Rev_0.3

ANT #1 (GSM_LB, B5/B8/B13/B17/B20/B28/B7)

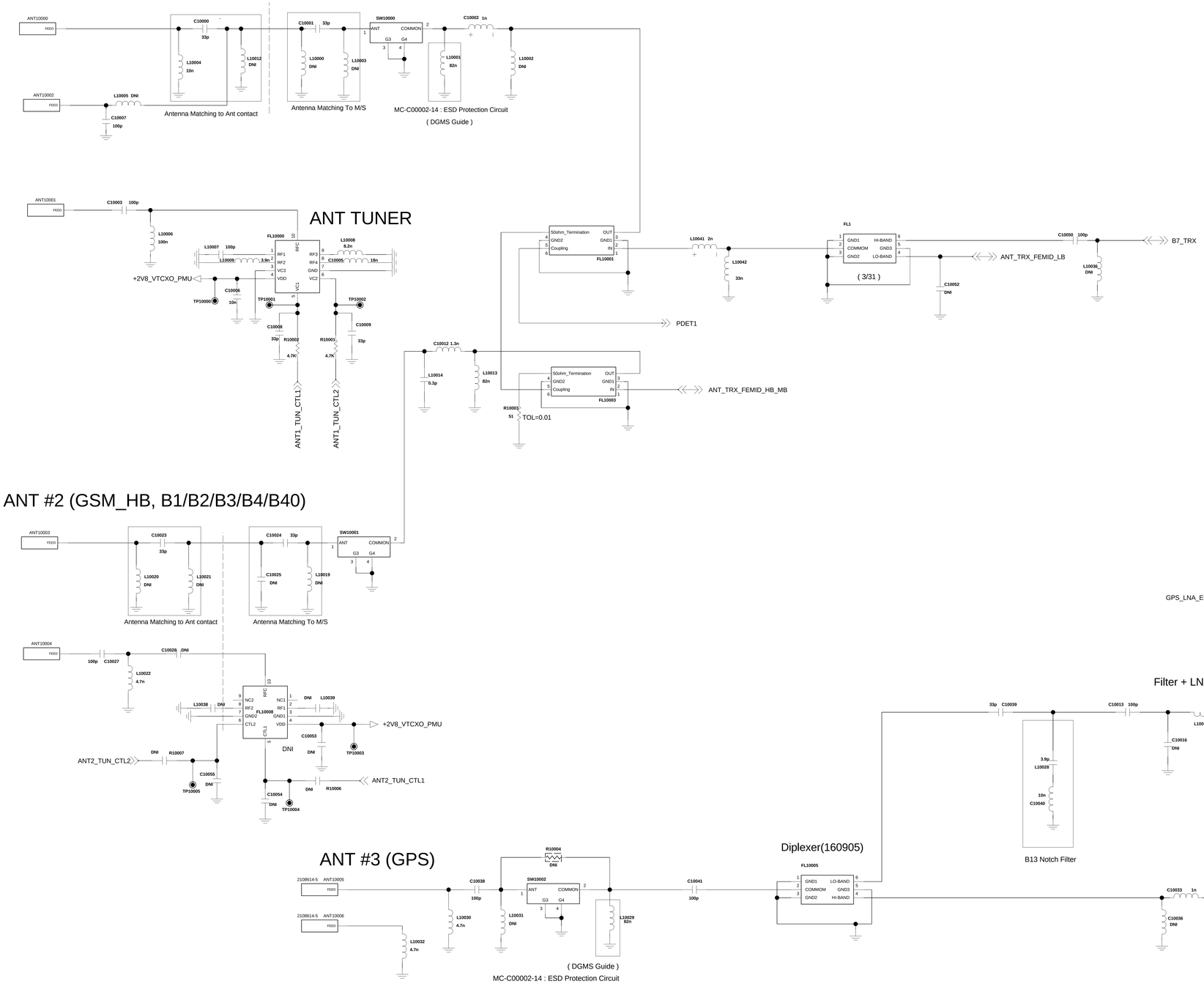

ANT #2 (GSM_HB, B1/B2/B3/B4/B40)

ANT #3 (GPS)

Filter + LNA Type

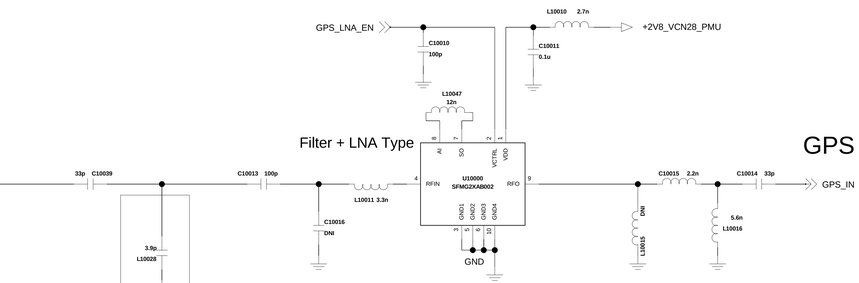

B7 DRX

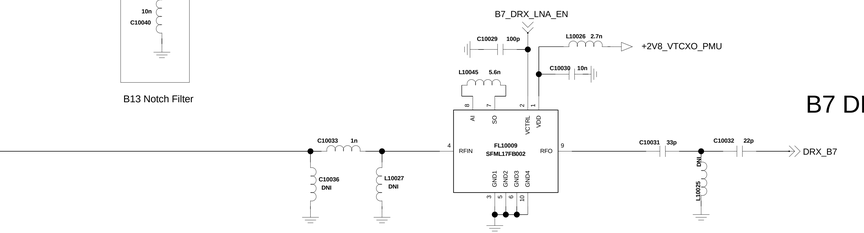

B13 Notch Filter

DRX B40 move from ANT #3 to ANT #4

LG Electronics

TITLE: Schematic1

SIZE: A2 | DWG NO: PDM NUMBER | REV: Rev

SHEET: 1-1_ANT 18 | Date: Drawing Date | DRAWN BY: User Name

LGE Internal Use Only

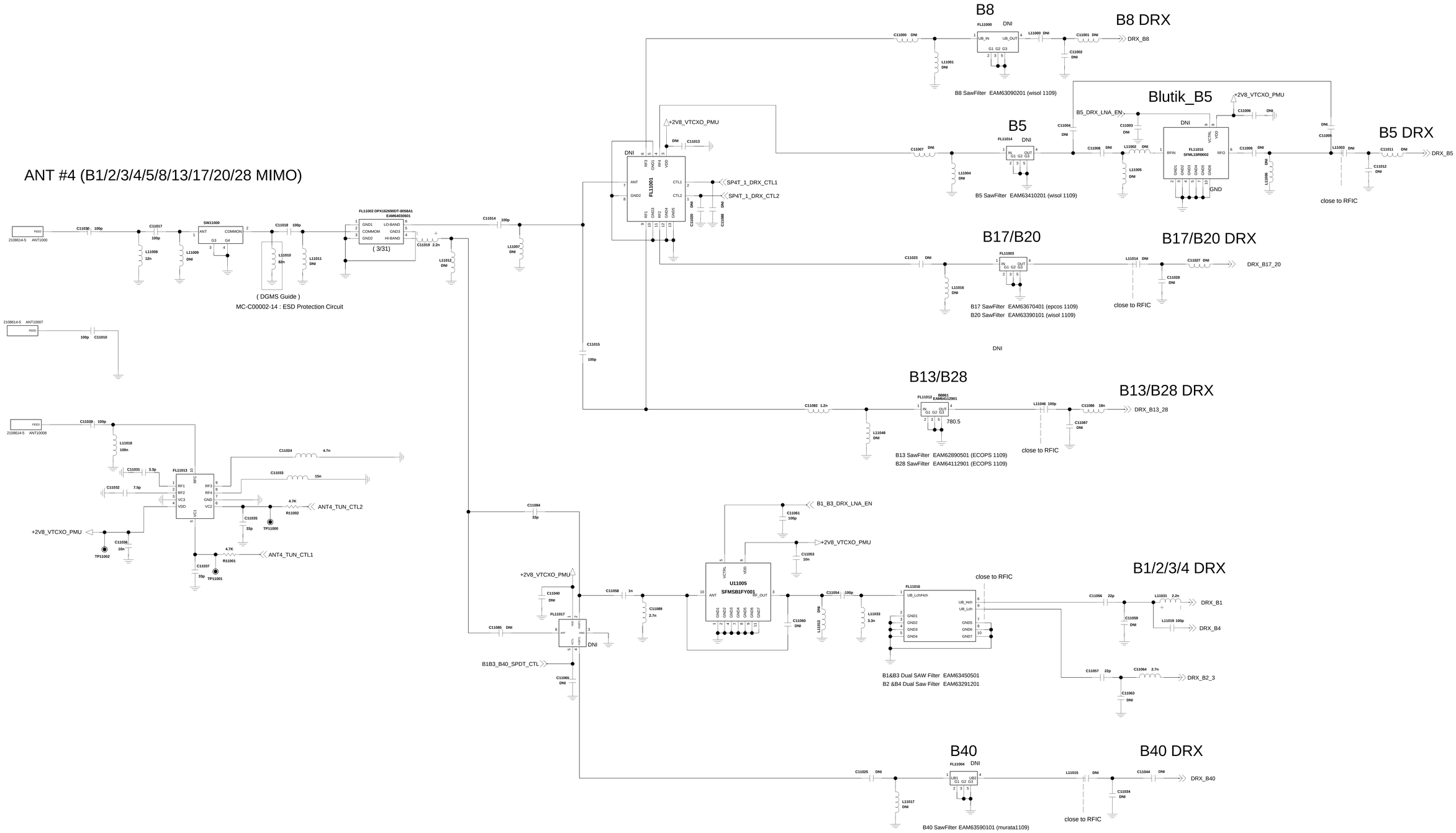

LG Electronics

TITLE: Schematic1

SIZE: A2 | DWG NO: PDM NUMBER | REV: Rev

DRAWN BY: User Name | SHEET: 1-2_ANT_DRX | Date: Drawing Date

LGE Internal Use Only

uFEMID

ºÏ¹ÌÇã SAW Front End Module(D5322) EAT63414801
B4/5/8 duplexer
G1800,TX2G LPF

GlobalÇã SAW Front End Module(D5323)EAT63375201
B1/3/5/8 duplexer

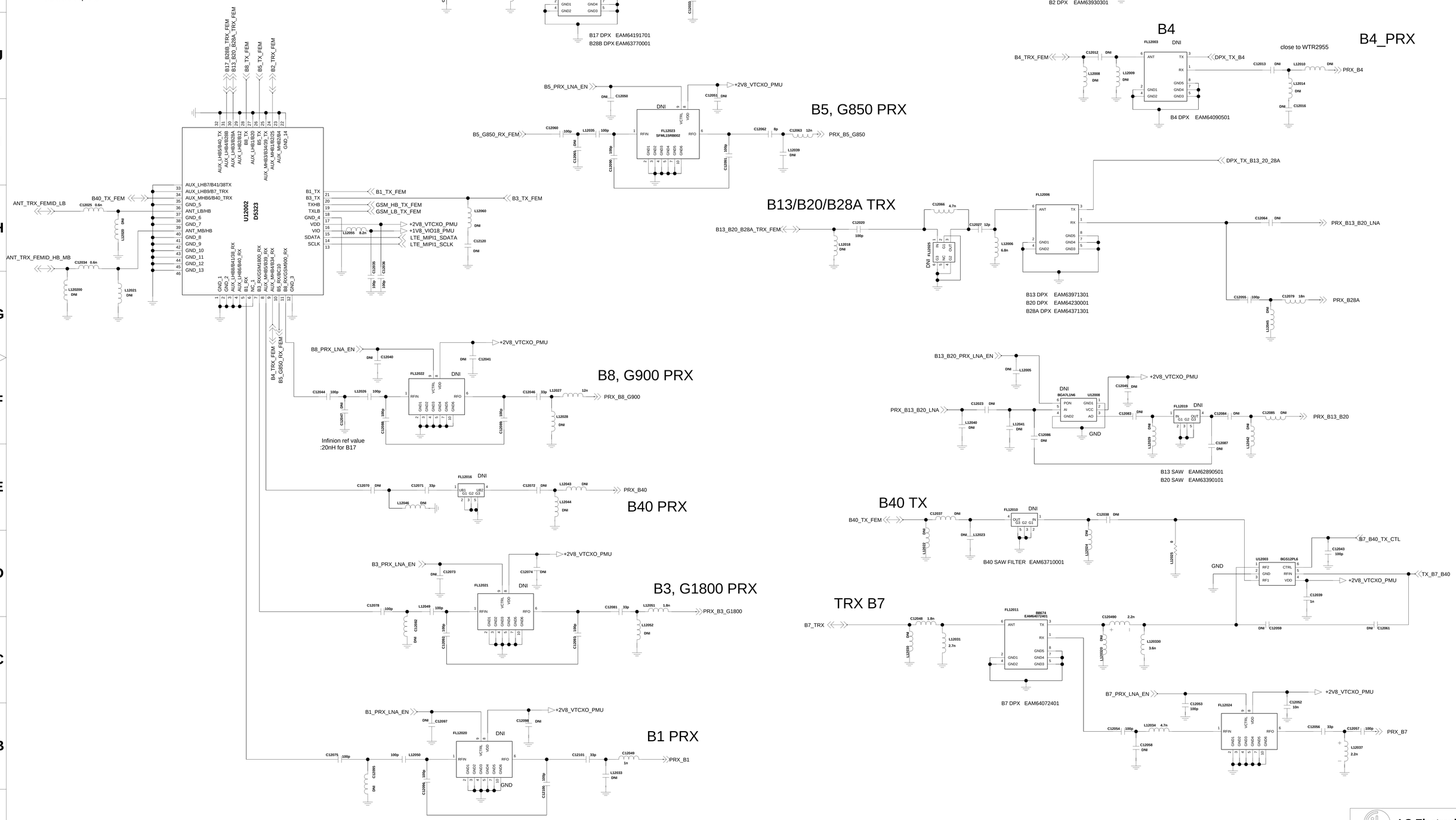

LG Electronics

TITLE MODEL NAME

SIZE A2 | DWG NO PDM NUMBER | REV Rev

DRAWN BY User Name | SHEET 1 OF 18 | Date Drawing Date

LGE Internal Use Only

MMPA2.0

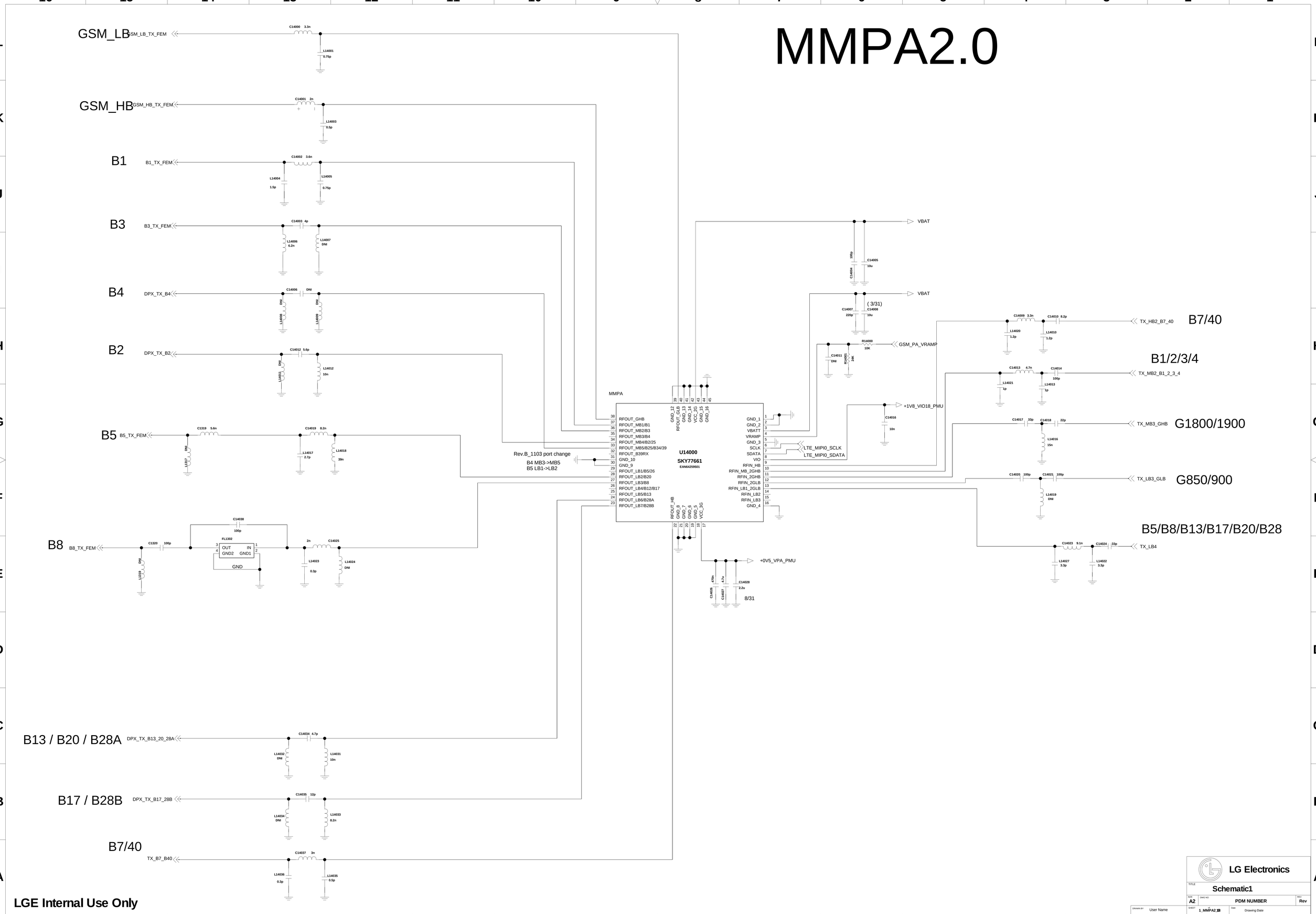

LGE Internal Use Only

LG Electronics

TITLE: Schematic1

SIZE: A2 | DWG NO: PDM NUMBER | REV: Rev

DRAWN BY: User Name | SHEET: 1_MMPA2.0 | Date: Drawing Date

< 1-X MT6176 RFIC > RDK

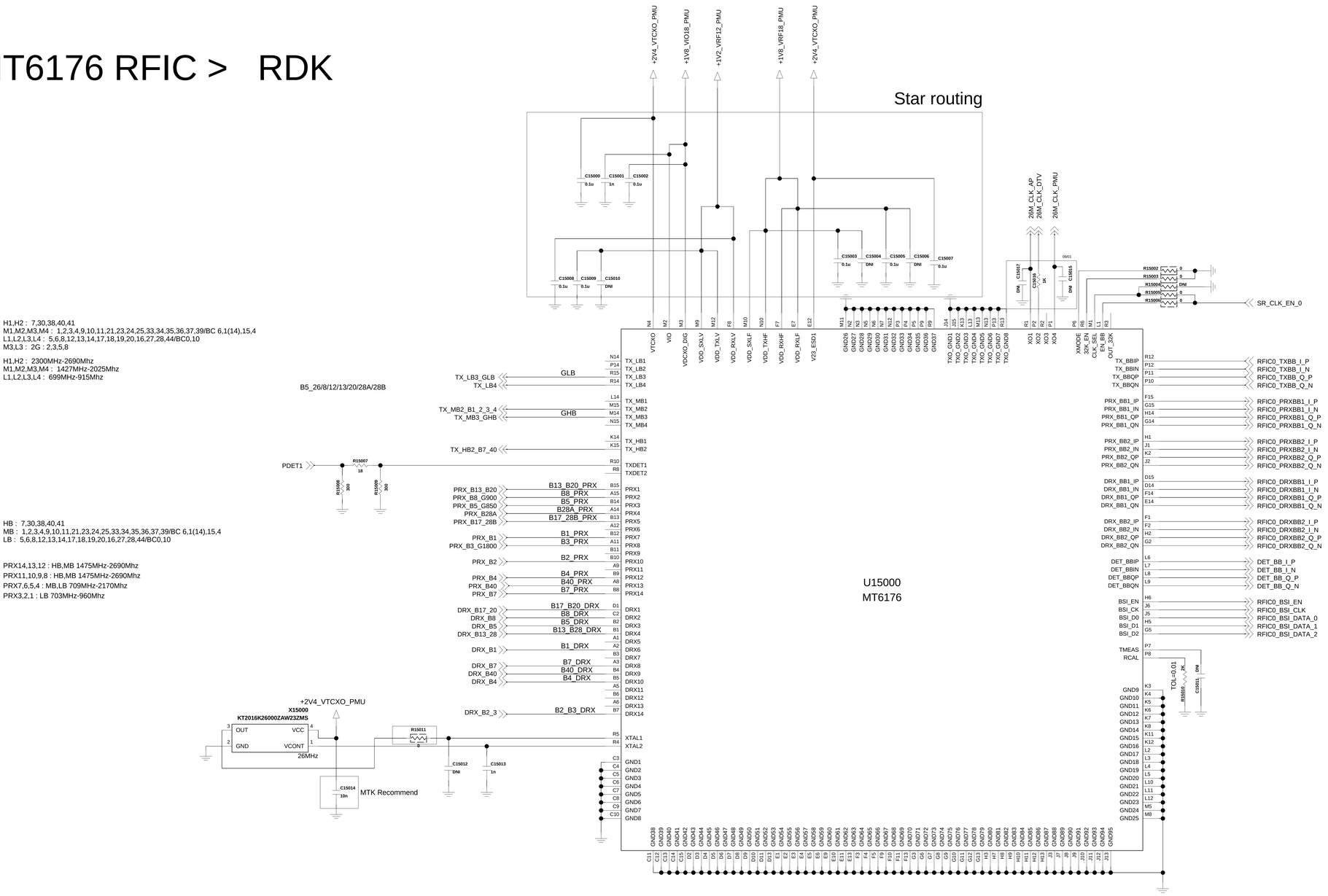

LGE Internal Use Only

LG Electronics

TITLE: Schematic1

SIZE: A2 | DWG NO: PDM NUMBER | REV: Rev

DRAWN BY: User Name | SHEET 25 OF 20 | Date: Drawing Date

NFC

NFC Antenna

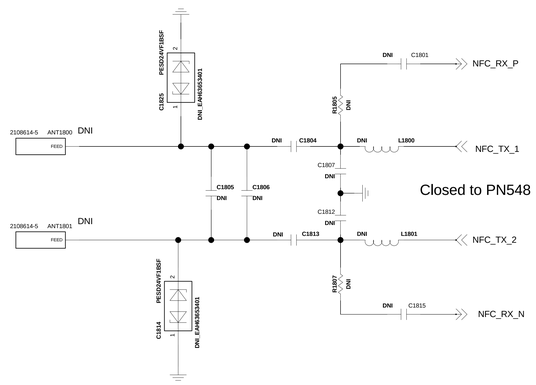

PN548 _main

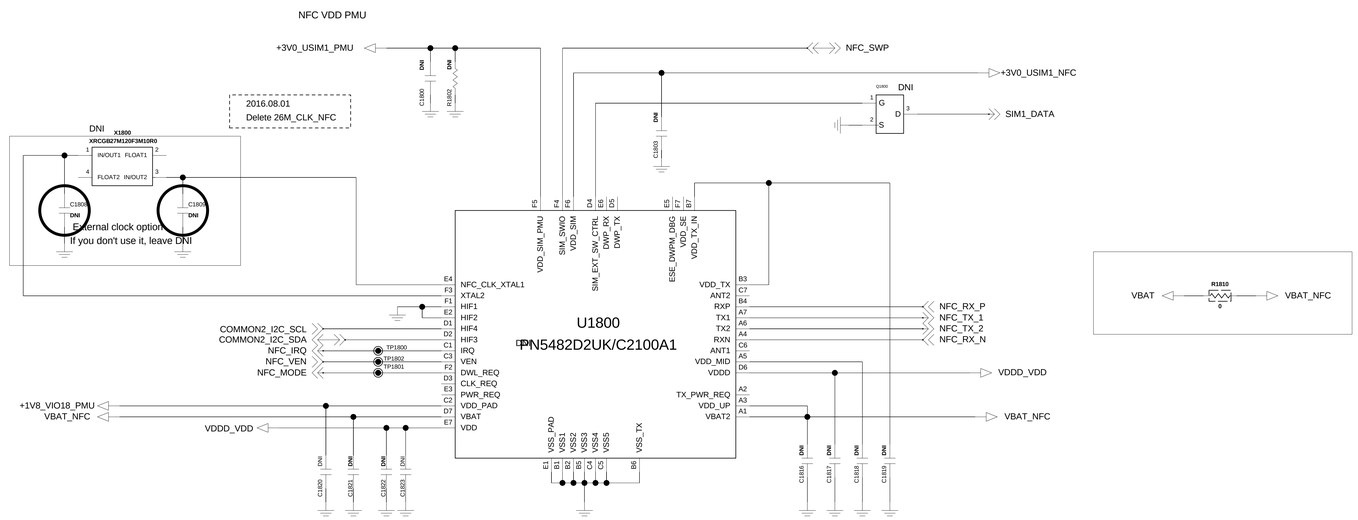

LGE Internal Use Only

LG Electronics	
TITLE	Schematic1
SIZE A2	DWG NO PDM NUMBER
REV Rev	
DRAWN BY User Name	SHEET 1_8_PN548
Date Drawing Date	

< 2-1_MT6750_DATA >

PCB Rev 1.0

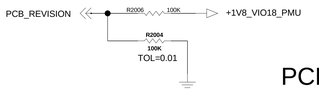

PCB_Revision

0	100K	20K	0.300
0_1	100K	27K	0.383
A	100K	39K	0.505
B	100K	51K	0.608
C	100K	75K	0.771
1.0	100K	100K	0.900
1.1	100K	130K	1.017

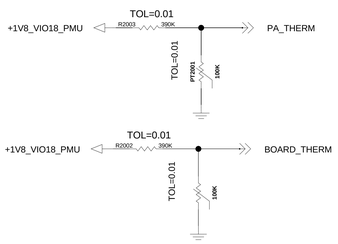

RFIC

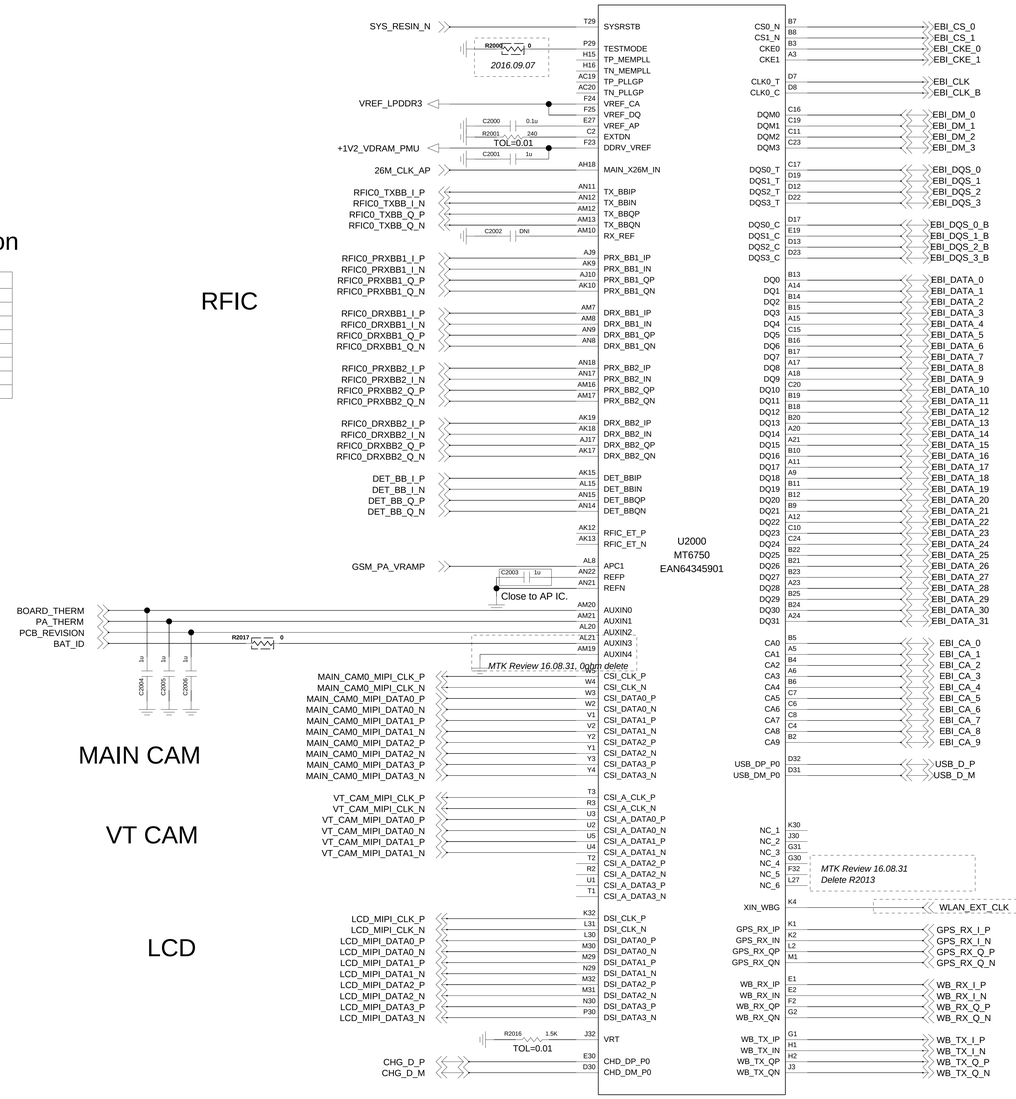

MCP(LPDDR)

USB D

VT CAM

LCD

Default resistor of "SSUSB_VRT" can be NC
if internal USB VRT is applied.

CONNECTIVITY

LGE Internal Use Only

LG Electronics

TITLE: Schematic1

SIZE	DWG NO	REV
A2	PDM NUMBER	Rev

DRAWN BY: User Name | SHEET: 2-1_MT6750_DATA | Date: Drawing Date

< 2-1_MT6750_GPIO >

MTK Review
RAM Dump Key Function possible that ther is DRAM latch Issue

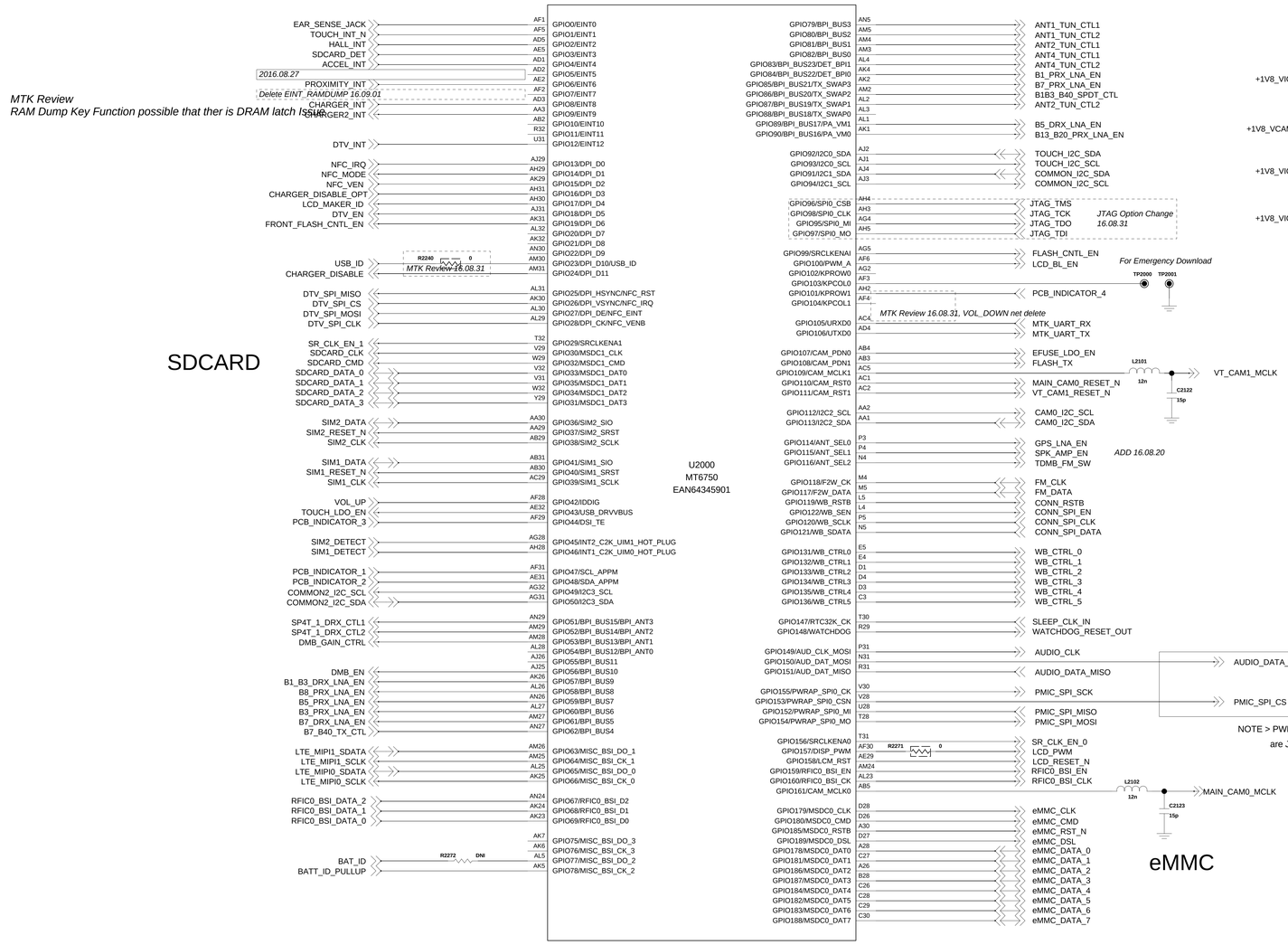

eMMC

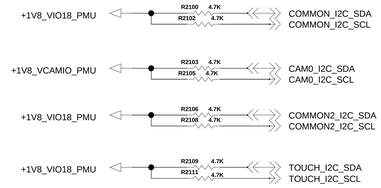

COMMON_I2C : DSV_BACKLIGHT_FLASH(LM3632A), SENSORS
Slave Charger BQ25898C

CAM0_I2C : MAIN / VT CAMERA

COMMON2_I2C : CHARGER SM5424, NFC

TOUCH_I2C : TOUCH

[JTAG]

Sync. LV5

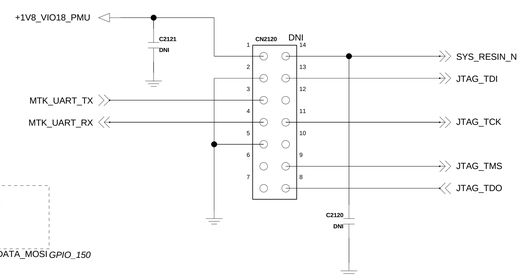

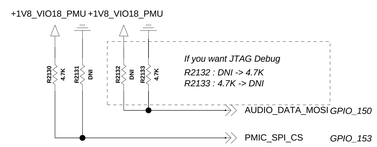

JTAG Option

NOTE >

LV7 JTAG Option

NOTE > PWRAP_SPI0_CSN and AUD_DAT_MOSI are JTAG feature in bootstrap.

GPIO153(PMI_SPI_CS)	GPIO150(Audio_DATA_MOSI)	
HI	LOW	NA
HI	HI	SPI_CSB/SPI_CLK/SPI_MO/SPI_MI
LOW	LOW	CAM_CLK0/CAM_RST0/CAM_RST1/CAM_PDN0
LOW	HI	MSDC1_CLK/MSDC_CMD/MSDC1_DAT0/MSDC1_DAT1

PCB INDICATOR

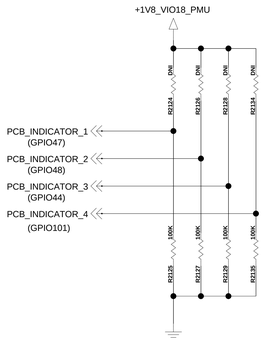

	M320tv	M320n	M320	M320F	M320AR	M320H	M320dsn	M320Y	M320YK	M320K	MX320L	MX320S	MX320K	TBD1	TBD2
PCB_INDICATOR_1	L	H	L	H	L	H	L	H	L	H	L	H	L	H	L
PCB_INDICATOR_2	L	L	H	H	L	L	H	H	L	L	H	H	L	L	H
PCB_INDICATOR_3	L	L	L	L	H	H	H	H	L	L	L	L	H	H	H
PCB_INDICATOR_4	L	L	L	L	L	L	L	L	H	H	H	H	H	H	H
	0	1	2	3	4	5	6	7	8	9	10	11	12	13	14

MODEL INDICATOR

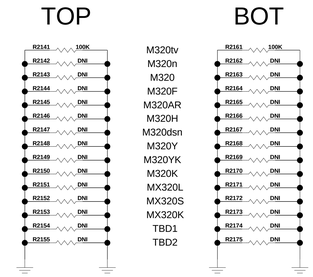

LGE Internal Use Only

	LG Electronics
TITLE	Schematic1
SIZE A2	DWG NO PDM NUMBER
Rev	
SHEET 2-1_MT6750_GPIO	Date Drawing Date
DRAWN BY User Name	

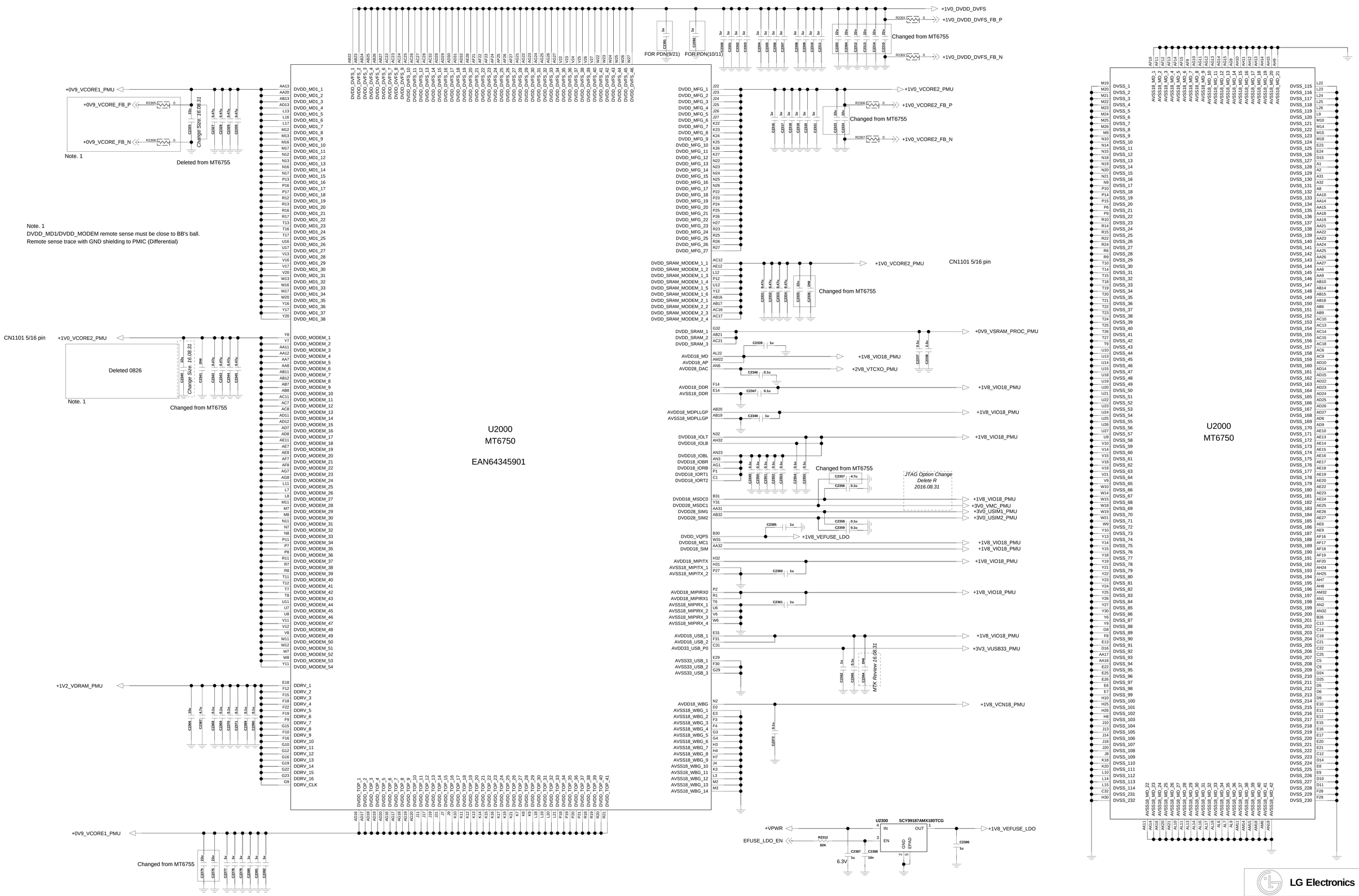

LGE Internal Use Only

LG Electronics

Schematic1

SIZE A2	DWG NO PDM NUMBER	REV Rev
DRAWN BY User Name	SHEET 2-1_MT6750_POWER_GND	Drawing Date

< MCP_eMMC_5_0_16Gb_DDR3_16GB_eMMC Hynix >

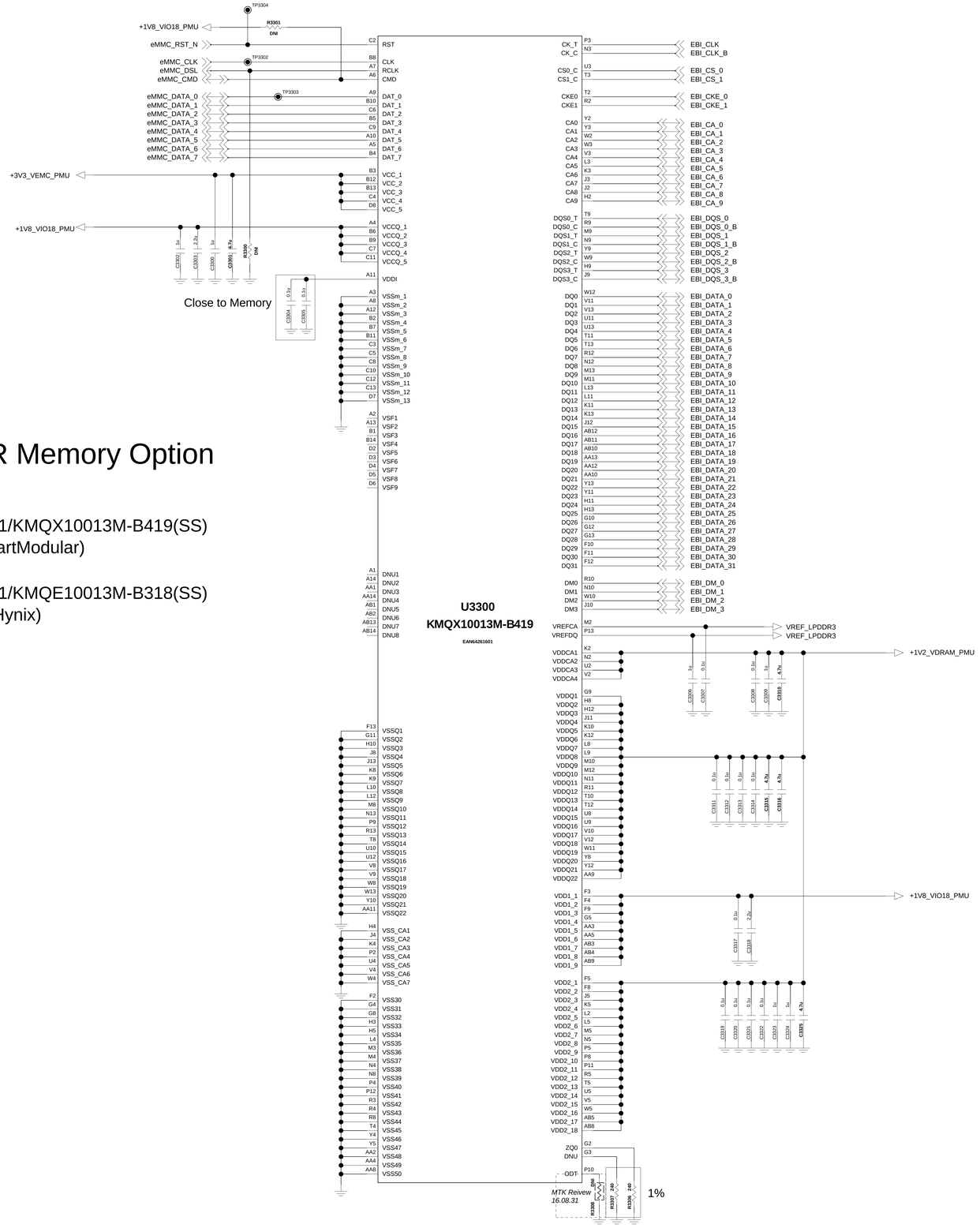

LV7 Global/KOR Memory Option

1. Brazil(2GB/32GB)
   1st : EAN64261601/KMQX10013M-B419(SS)
   PPB : Not Yet(SmartModular)
2. All(2GB/16GB)
   1st : EAN64254101/KMQE10013M-B318(SS)
   2nd : Not Yet(SK Hynix)

32GBYTE 1.7VTO1.95V,2.7VTO3.6V,1.14VTO1.3V 11.5x13.0x1.0 TRAY 221P NAND+DDR SDRAM FBGA 32GB eMMC v5.1+16Gb LPDDR3 MCP (14nm 128Gb MLC + 20nm 8Gb 933MHz LPDDR3)

LGE Internal Use Only

LG Electronics

TITLE	Schematic1
SIZE	A2
DWG NO	PDM NUMBER
REV	Rev
DRAWN BY	User Name
SHEET	3-3_MCP_eMMC_5_0_16Gb_DDR3_16GB_HYNIX

<4-1-15-1_PMIC_MT6353_DATA >

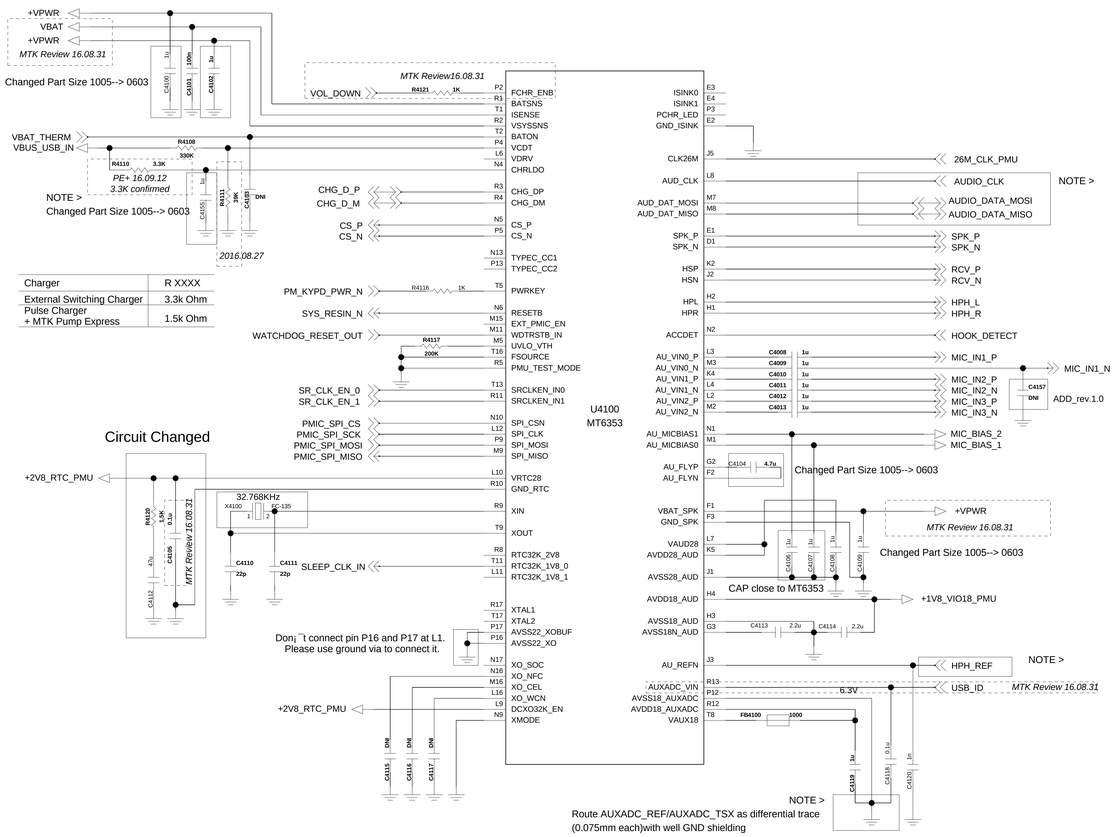

Charger	R XXXX
External Switching Charger	3.3k Ohm
Pulse Charger + MTK Pump Express	1.5k Ohm

<4-1-15-1_PMIC_MT6353_POWER > Rev_0.1

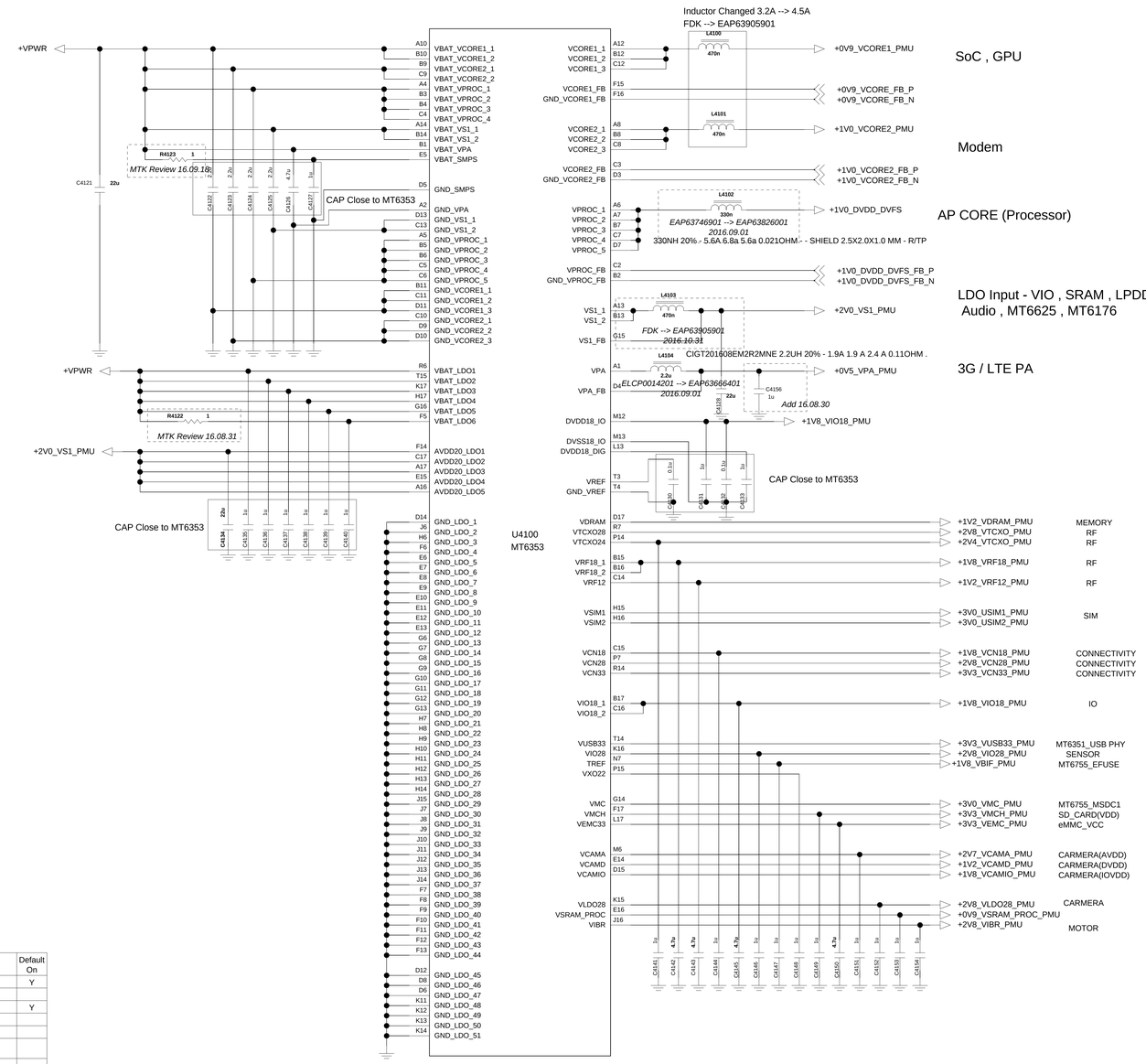

BUCK & LDO

Function	Default Voltage	Vout	Voltage Step [mV]	Rated Current	Default On
VCORE1	0.9V	0.600 - 1.310 V	6.25	3,000mA	Y
VCORE2	1.0V	0.600 - 1.310 V	6.25	3,500mA	Y
VPROC	1.0V	0.600 - 1.310 V	6.25	5,000mA	Y
VS1	2.0V	1.950 - 2.200 V	12.5	1,900mA	Y
VPA	0.5V	0.500 - 3.400 V	50	800mA	N

Function	Type	Input Power Domain	Default Voltage	Vout	Rated Current	Default On
VDRAM	SLDO	AVDD20_LDO1	1.24 V	1.24 V	1,000mA	Y
VTCXO28	ALDO	VBAT_LDOS1	2.8 V	2.8 V	40mA	
VTCXO24	ALDO	VBAT_LDOS2	2.375 V	2.375 V	40mA	Y
VRF18	SLDO	AVDD20_LDO5	1.825 V	1.825 V	400mA	
VRF12	SLDO	AVDD20_LDO5	1.2 V	1.2 V	150mA	
VSIM1	DLDO	VBAT_LDO4	1.8 V	1.7 / 1.8 / 1.86 / 2.76 / 3.0 / 3.1 V	50mA	
VSIM2	DLDO	VBAT_LDO4	1.8 V	1.7 / 1.8 / 1.86 / 2.76 / 3.0 / 3.1 V	50mA	
VCN18	SLDO	AVDD20_LDO2	1.8 V	1.8 V	150mA	
VCN28	ALDO	VBAT_LDO1	2.8 V	2.8 V	40mA	
VCN33	DLDO	VBAT_LDO2	3.3 V	3.3 / 3.4 / 3.5 / 3.6 V	350mA	
VIO18	SLDO	AVDD20_LDO3	1.8 V	1.8 V	600mA	Y
VUSB33	DLDO	VBAT_LDO2	3.3 V	3.3 V	50mA	Y
VIO28	DLDO	VBAT_LDO4	2.8 V	2.8 V	200mA	Y
VREF	Power Switch	VBAT_LDO1	1.8 V	1.8 V	1mA	
VXO22	ALDO	VBAT_LDOS2	2.2 V	2.2 V	20mA	Y
VMC	DLDO	VBAT_LDO5	3.0 V	1.8 / 2.9 / 3.0 / 3.3 V	200mA	
VMCH	DLDO	VBAT_LDO5	3.0 V	2.9 / 3.0 / 3.3 V	800mA	
VEMC33	DLDO	VBAT_LDO3	3.0 V	2.9 / 3.0 / 3.3 V	800mA	Y
VCAMA	ALDO	VBAT_LDO1	2.8 V	2.5 / 2.8 V	200mA	
VCAMD	SLDO	AVDD20_LDO2	1.3 V	0.9 / 1.0 / 1.1 / 1,22 1.3 / 1.5 / 1.8 V	<=1.5V : 500mA 1.8V : 300mA	
VCAMIO	SLDO	AVDD20_LDO2	1.8 V	1.8 V	200mA	
VLDO28	DLDO	VBAT_LDO4	2.8 V	2.8 V	300mA	
VSRAM_PROC	SLDO	AVDD20_LDO4	1.1 V	0.6 - 1.31 V	400mA	Y
VIBR	DLDO	VBAT_LDO4	2.8 V	1.2 / 1.3 / 1.5 / 1.8 2.5 / 2.8 / 3.0 / 3.3 V	100mA	
VAUX18	ALDO	VBAT_LDO1	1.8 V	1.8 V	40mA	Y
VAUD28	ALDO	VBAT_LDO1	2.8 V	2.8 V	40mA	Y
VRTC28	VRTC28	VBAT_LDO1	2.8 V	2.8 V	2mA	Y
VDIG18	DVDD18_DIG	VBAT_LDO2	1.8 V	1.8 V	20mA	Y

LGE Internal Use Only

LG Electronics

TITLE: Schematic1

SIZE	DWG NO	REV
A2	PDM NUMBER	Rev

SHEET 20 of 20 | DRAWN BY: User Name | Date: Drawing Date

< Parallel Charging - SM5424 >

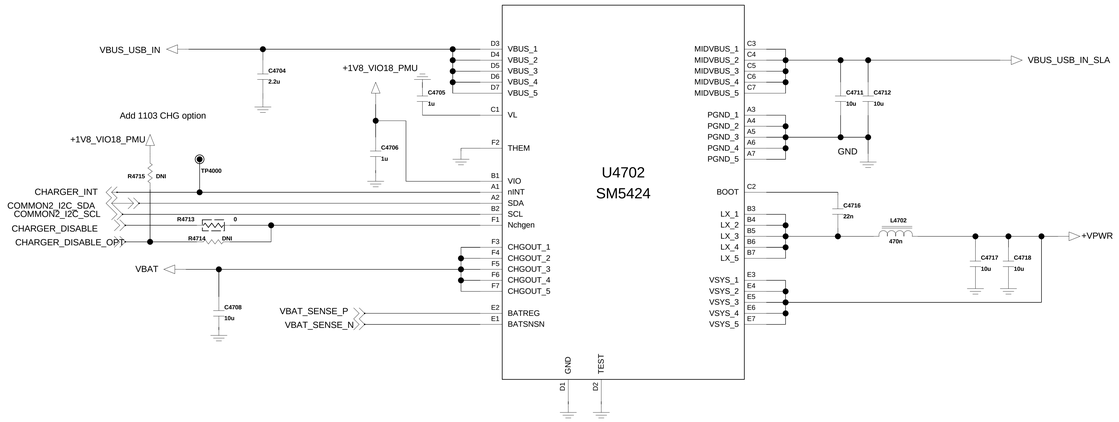

< SLAVE CHARGER bq25898s >

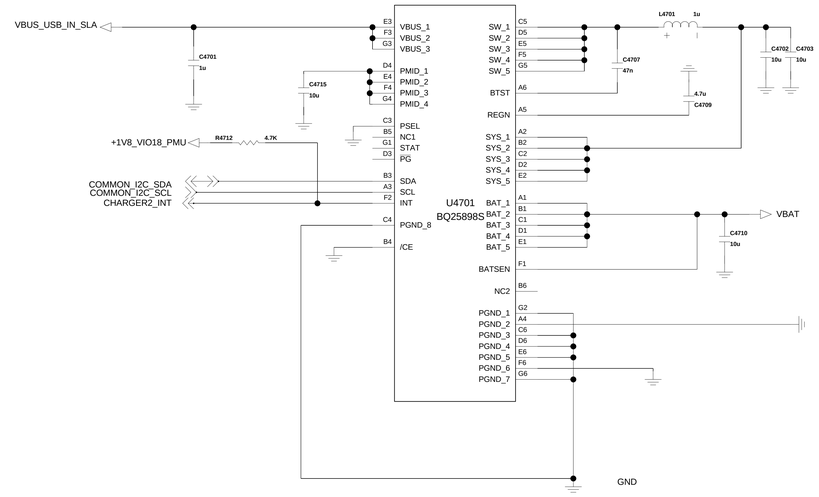

LGE Internal Use Only

	LG Electronics
TITLE	Schematic1
SIZE A2	DWG NO PDM NUMBER
	REV Rev
DRAWN BY User Name	SHEET 4-2_CHARGER
	Date Drawing Date

<5-1-1-18_MT6625L_WiFi_BT_GPS_FM>

Rev_0.3

ANT (BT, WiFi)

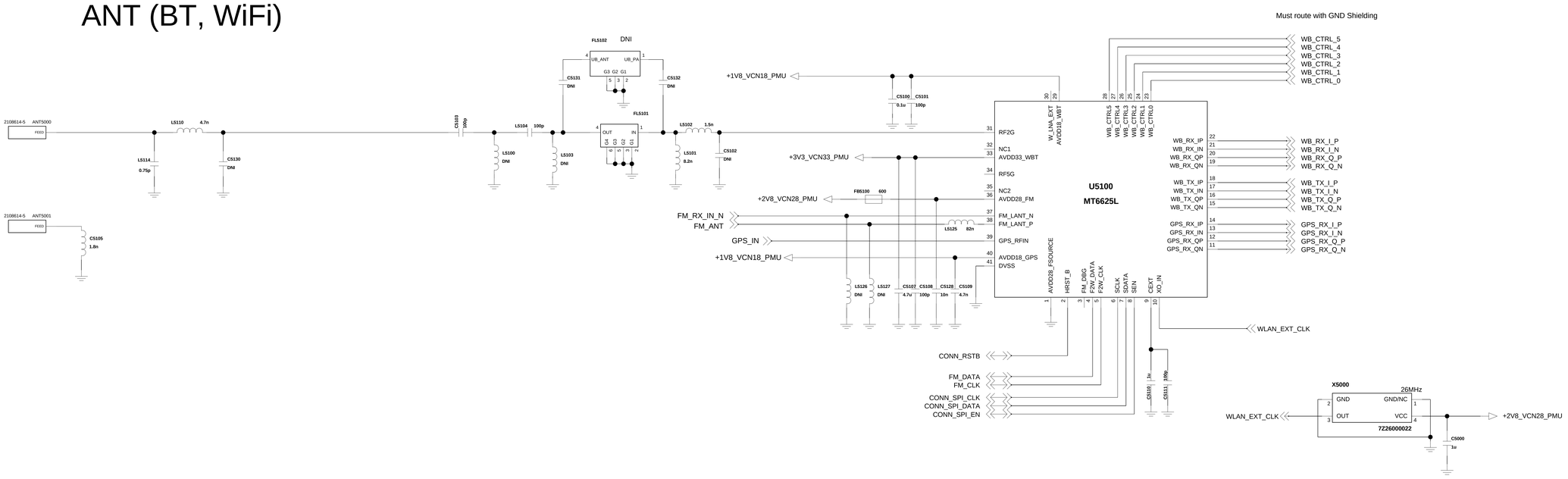

LGE Internal Use Only

LG Electronics

TITLE: Schematic1

SIZE	DWG NO	REV
A2	PDM NUMBER	Rev

DRAWN BY: User Name

SHEET: 5-1_BT_WiFi_GPS_MT6625L

DATE: Drawing Date

TDMB_1SEG Swap circuit

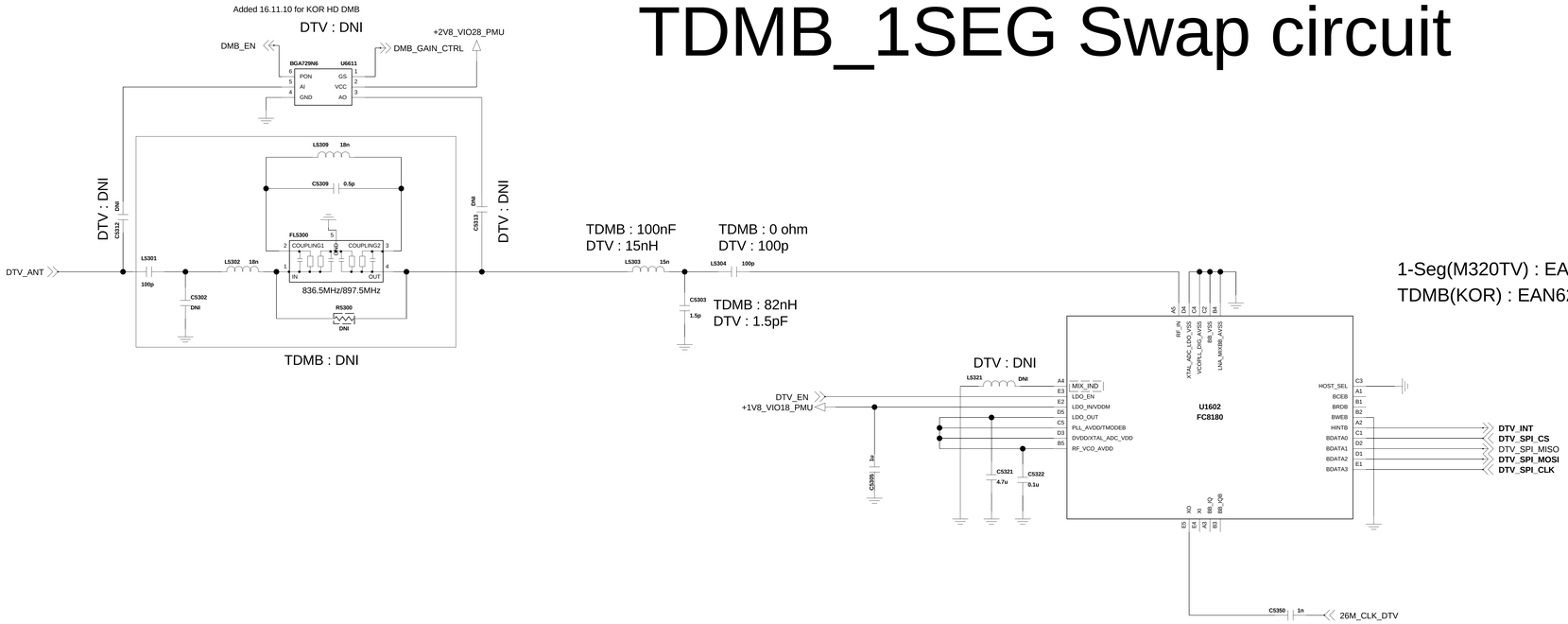

1-Seg(M320TV) : EAN63567401(FC8180) using option2 Library
TDMB(KOR) : EAN62909201(FC8080)

LGE Internal Use Only

LG Electronics

TITLE: Schematic1

SIZE: A2 | DWG NO: PDM NUMBER | REV: Rev

DRAWN BY: User Name | SHEET: 5-3-1-3_DTV8 | Date: Drawing Date

< SPK AMP >

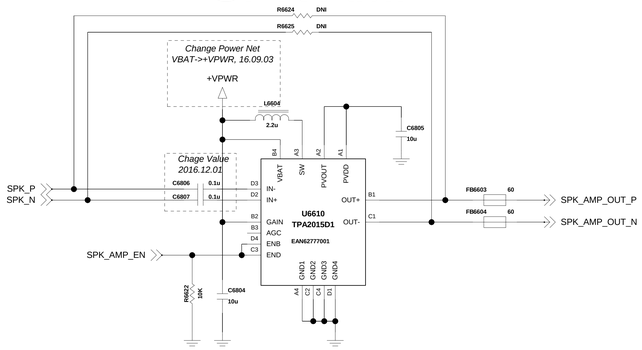

< 6-6-1_Earjack >

Rev_0.6

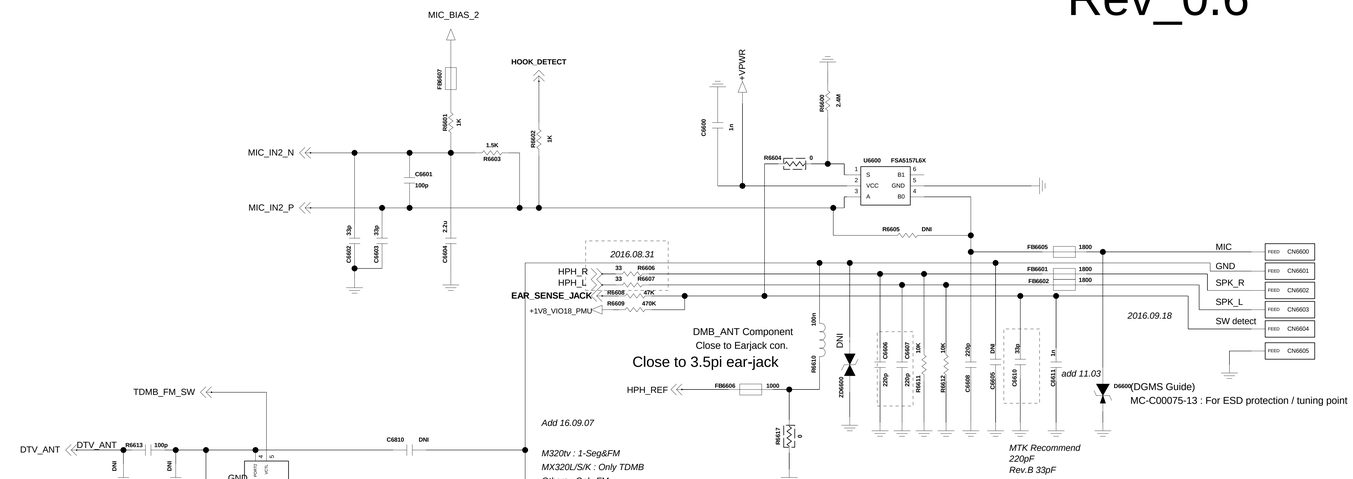

< 6-7-1_Speaker >

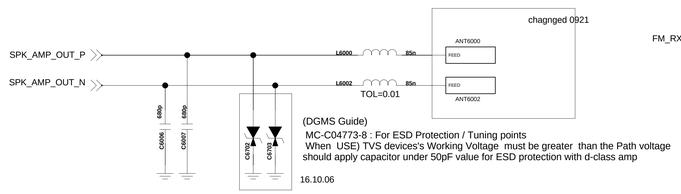

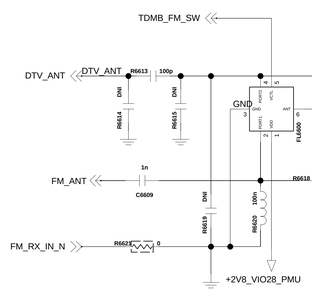

< 6-9-2_2MIC >

Main MIC

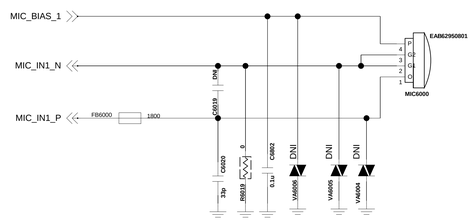

Sub_MIC

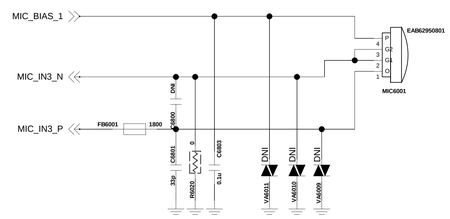

< 6-8-2_Receiver >

Rev_0.4

LGE Internal Use Only

LG Electronics	
TITLE	Schematic1
SIZE A2	DWG NO PDM NUMBER
REV Rev	
DRAWN BY User Name	SHEET 6-6_SPK_REV_MIC_EARJACK
Drawing Date	

5.5" Incell LCD Connector

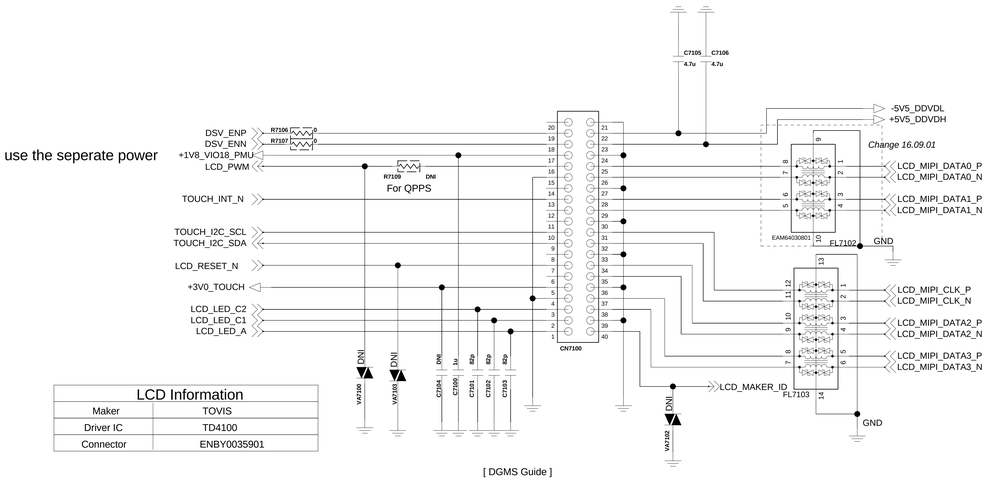

LCD Information	
Maker	TOVIS
Driver IC	TD4100
Connector	ENBY0035901

[DGMS Guide]
MC-C00057-16
1 - Components for ESD Protection should be located nearby at LCD Data, Control and Power line.
2- Basically, DNI_PAD for ESD Protection components should be used.
2- LCD RESET should be allocated with dedicated GPIO for the purpose of Reset function.

TOUCH LDO
DNI

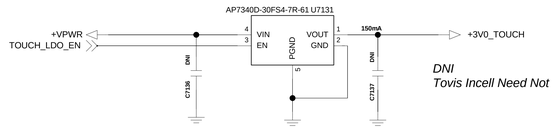

LCD LDO

deleted 0921

1. LCD_Backlight_Flash_DSV_DW8767
Changed 10/31

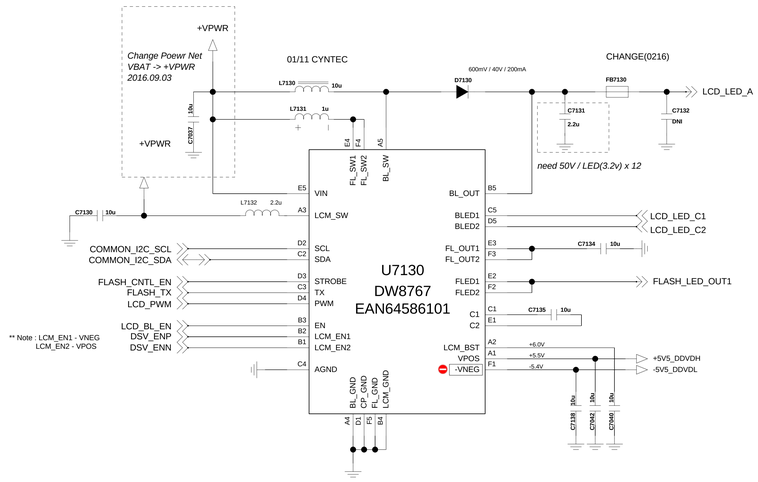

<Main_Flash_LED> <Front_Flash_LED>

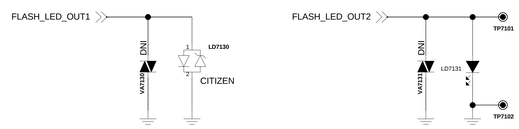

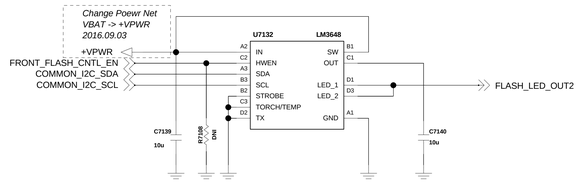

LG Electronics

TITLE: Schematic1

SIZE	DWG NO	REV
A2	PDM NUMBER	Rev

DRAWN BY: User Name | SHEET: 7-1_Standard_TOUCH_LCD | Drawing Date

LGE Internal Use Only

<7-3-5-1_30pin_5M_8M_13M_AF> Rev_0.3

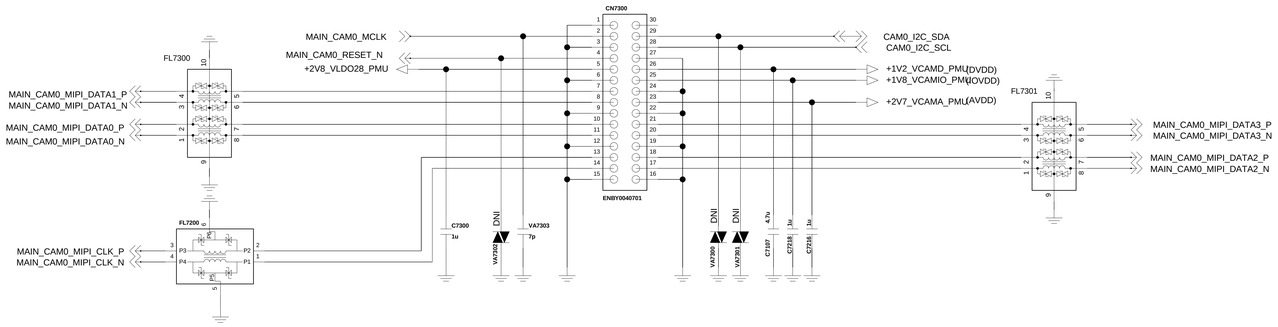

< 7-4-x_Front_Camera_30pin_8M_FF>

[DGMS Guide]

MC-C00081-17: 1. Add ESD Protection curcuit for Camera signal lines

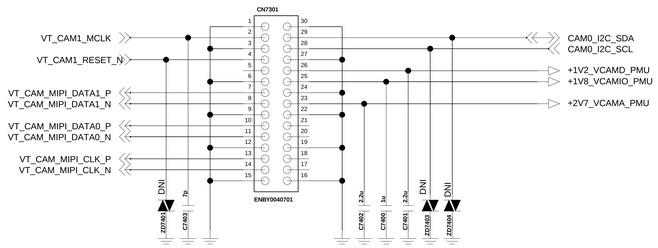

LGE Internal Use Only

	LG Electronics
TITLE	Schematic1
SIZE A2	DWG NO PDM NUMBER REV Rev
DRAWN BY User Name	SHEET 7-2_Standard CAMERA_1 Drawing Date

< PWR KEY_VOL KEY>

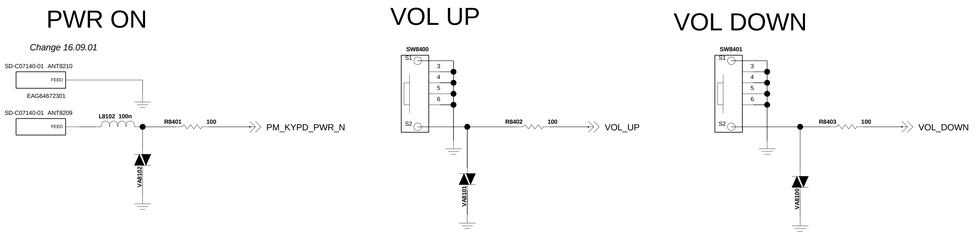

< 9-9-1-1_MOTOR >

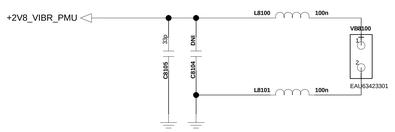

< 8-7-1-5_Hall_IC_S5717 > Rev_1.1

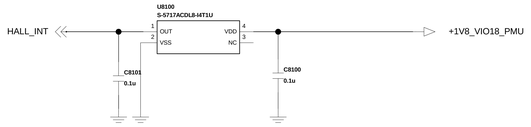

(DGMS Guide)
MC-C00058-12
Adjust the bypass capacitor value as necessary, according to signal line noise conditions

< 8-4-3-4_Proximity_APDS-9930-130 >

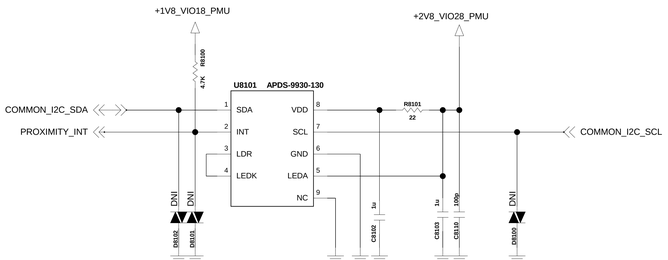

<8-1-2-1_Accel_Gyro_BMI120>

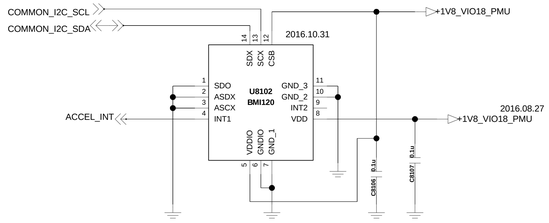

< Geomagnetic_AK09916C >

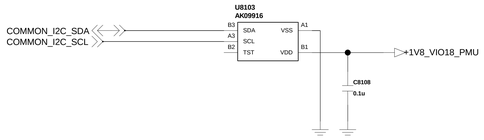

Shield CAN / C-Clip

MT6750/MCP Shield Can clip_8ea(BOT1)

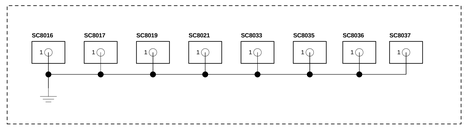

BOT SMT Shield Can

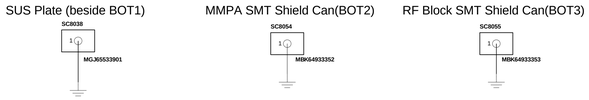

TOP SMT Shield Can

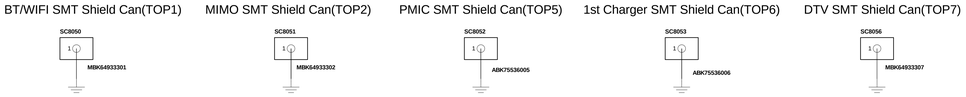

PID 6x6

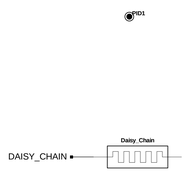

Add 16.09.03

SMT Gasket

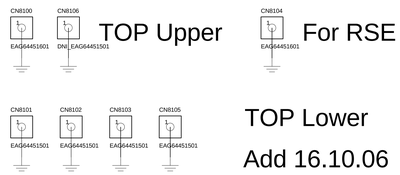

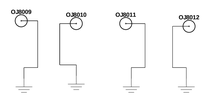

LGE Internal Use Only

LG Electronics	
TITLE	Schematic1
SIZE A2	DWG NO PDM NUMBER
REV Rev	
DRAWN BY User Name	SHEET 8_Sensor_VIB_KEY_ShieldCAN and
Date	

Circuit 4. Batt Conn. /w Embedded Batt

<9-1_Battery_Connector_4Pin>_0913

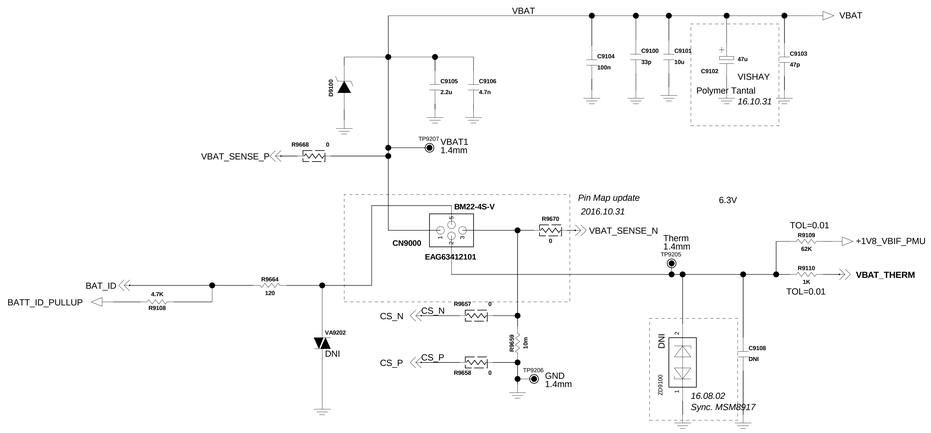

< 9-6_u_SDCARD_Socket > Rev.1.1

1st SIM & SD Card

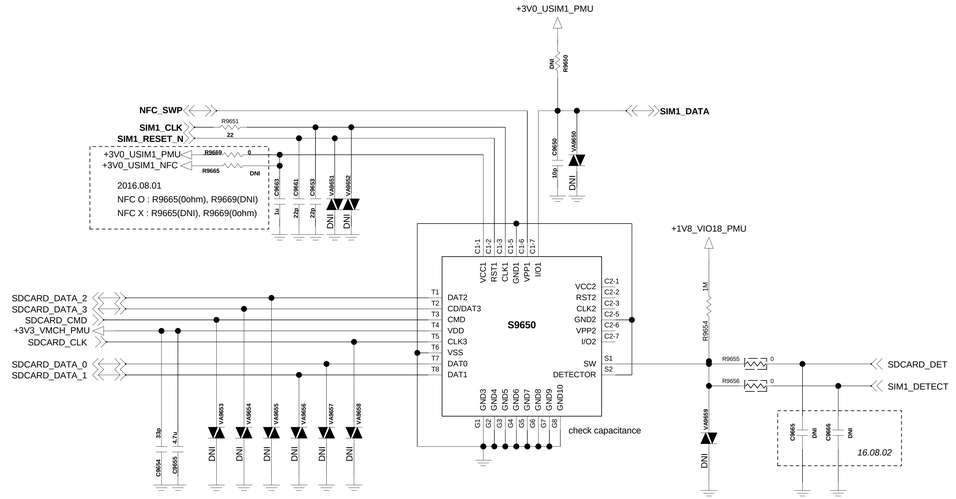

(DGMS Guide)
MC-C04581-13 : Below items should be satisfied
1. SIM_DATA pull-up resistor
2. Use under 33pF (Cap_Varistor) on each signal line
3. When routing, SIM_DATA, SIM_CLK should be seperated
4. CAP,Varistor should Place close to connector

(DGMS Guide)
MC-C04582-14 : Below items should be satisfied
1. SD_DETECT Pull-up or Pull-down
2. Data/CMD line should be needed Pull-up resistor
(If chipset has internal Pull-up, comment it on circuit)
3. Use under total 10pF Capacitance on each line ; Data [0:3], CMD - Cap. TVS diode, varistor
(on other line, We recommend 10pF capacitance and use under 30pF capacitance)
4. CAP,Varistor should Place close to connector

(DGMS Guide)
MC-C05446-7 : Below items should be satisfied
1. Power of SD card should use independant Power source just like LDO/PMIC which can turn off it.
2. Per chip type which support SD card should manage current capacity.
(In case of High speed mode, SD Card Power should get margin of 200mA)
3. Do not connect serial component to SD card power, voltage drop can arise at Power line.

<9-2-1_USB_IO> Rev.1.0

Connector 1. USB 2.0

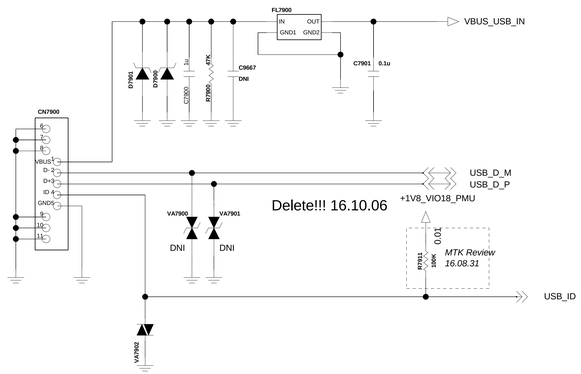

<4-3-3_OVP_RT9718> Rev.0.3

Delete!!! 16.09.03

FACTORY TP
Delete 16.08.30

NanoSIM Socket (2nd SIM)

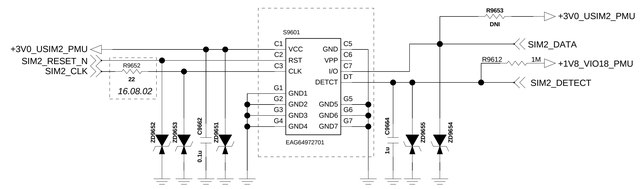

LG Electronics

TITLE: Schematic1

SIZE	DWG NO	REV
A2	PDM NUMBER	Rev

DRAWN BY: User Name | SHEET: 9-1 Soket_Battery_IO | Date: Drawing Date

LGE Internal Use Only

U2000_MT6750_IC,Digital Baseband Processor(Top View)

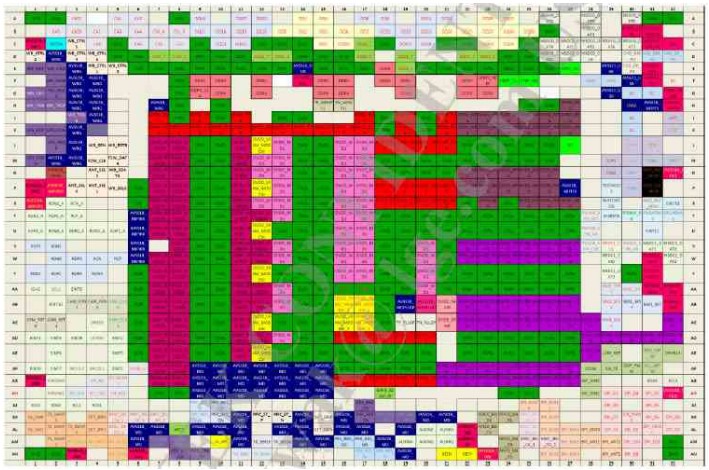

U3300_KMQX10013M-B419_IC, MCP EMMC (Top View)

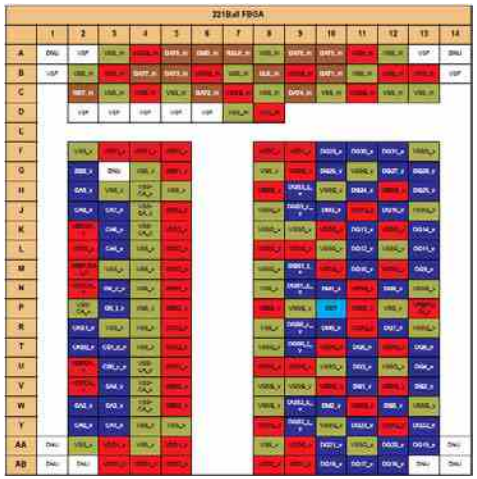

U4100_MT6353_IC,PMIC (Top View)

	1	2	3	4	5	6	7	8	9	10	11	12	13	14	15	16	17
A	VPA	GND_VPA		VBAT_VPROC	GND_VPROC	VPROC	VPROC	VCORE2		VBAT_VCORE		VCORE	VS1	VBAT_VS1		AVDD20_LDO5	AVDD20_LDO3
B	VBAT_VPA	GND_VPROC_FB	VBAT_VPROC	VBAT_VPROC	GND_VPROC	GND_VPROC	VPROC	VCORE2	VBAT_VCORE2	VBAT_VCORE	GND_VCORE	VCORE	VS1	VBAT_VS1	VRF18	VRF18	VIO18
C		VPROC_FB	VCORE2_FB	VBAT_VPROC	GND_VPROC	GND_VPROC	VPROC	VCORE2	VBAT_VCORE2	GND_VCORE2	GND_VCORE	VCORE	GND_VS1	VRF12	VCN18	VIO18	AVDD20_LDO2
D	SPK_N		GND_VCORE2_FB	VPA_FB	GND_SMPS	GND_LDO	VPROC	GND_LDO	GND_VCORE2	GND_VCORE2	GND_VCORE	GND_LDO	GND_VS1	GND_LDO	VCAMIO		VDRAM
E	SPK_P	GND_ISINK	ISINK0	ISINK1	VBAT_SMPS	GND_LDO	GND_LDO	GND_LDO	GND_LDO	GND_LDO	GND_LDO	GND_LDO	GND_LDO	GND_LDO	VCAMD	AVDD20_LDO4	VSRAM_PROC
F	VBAT_SPK	AU_FLYN	GND_SPK		VBAT_LDO6	GND_LDO	GND_LDO	GND_LDO	GND_LDO	GND_LDO	GND_LDO	GND_LDO	GND_LDO	GND_LDO	AVDD20_LDO1	VCORE_FB	GND_VCORE_FB	VMCH
G		AU_FLYP	AVSS18N_AUD			GND_LDO	GND_LDO	GND_LDO	GND_LDO	GND_LDO	GND_LDO	GND_LDO	GND_LDO	GND_LDO	VMC	VS1_FB	VBAT_LDO5
H	HPR	HPL	AVSS18_AUD	AVDD18_AUD		GND_LDO	GND_LDO	GND_LDO	GND_LDO	GND_LDO	GND_LDO	GND_LDO	GND_LDO	GND_LDO	GND_LDO	VSIM1	VSIM2	VBAT_LDO4
J	AVSS28_AUD	HSN	AU_REFN		CLK26M	GND_LDO	GND_LDO	GND_LDO	GND_LDO	GND_LDO	GND_LDO	GND_LDO	GND_LDO	GND_LDO	GND_LDO	GND_LDO	VIBR
K		HSP		AU_VINL_P	AVDD28_AUD						GND_LDO	GND_LDO	GND_LDO	GND_LDO	VLDO28	VIO28	VBAT_LDO3
L		AU_VINZ_P	AU_VINR_P	AU_VINL_N		VDRV	VAUD28	AUD_CLK	DCXO32K_EN	VRTC28	RTC32K_LV8_1	SPI_CLK	DVDD18_DIG			XO_WCN	VEMC33
M	AU_MICBIAS0	AU_VINZ_N	AU_VINR_N		UVLO_VTH	VCAMA	AUD_DAT_MOSI	AUD_DAT_MISO	SPI_MISO	WDTRSTB_IN	DVDD18_IO	DVSS18_IO			EXT_PMIC_EN	XO_CEL	
N	AU_MICBIAS1	ACCDET		CHRLDO	CS_P	RESETB	TREF		XMODE	SPI_CSN		TYPEC_CC1				XO_NFC	XO_SOC
P		FCHR_ENB	PCHR_LED	VCDT	CS_N		VCN28		SPI_MOSI			AVSS18_AUXADC	TYPEC_CC2	VTOX024	VX022	AVSS22_XO	AVSS22_XOBUF
R	BATSNS	VSYSSNS	CHG_DP	CHG_DM	PMU_TESTMODE	VBAT_LDO1	VTOX028	RTC32K_2V8	XIN	GND_RTC	SRCLKEN_IN1	AVDD18_AUXADC	AUXADC_VIN	VCN33			XTAL1
T	ISENSE	BATON	VREF	GND_VREF	PWRKEY			VAUX18	XOUT		RTC32K_LV8_0		SRCLKEN_IN0	VUSB33	VBAT_LDO2	PSOURCE	XTAL2

U15000_MT6176_IC,RF Transceiver,4G (Top View)

Copyright © 2017 LG Electronics. Inc. All right reserved. Only training and service purposes

U4702_SM5424, IC Charger (Top View)	U6610_TPA2015D1, IC, Speaker AMP (Top View)
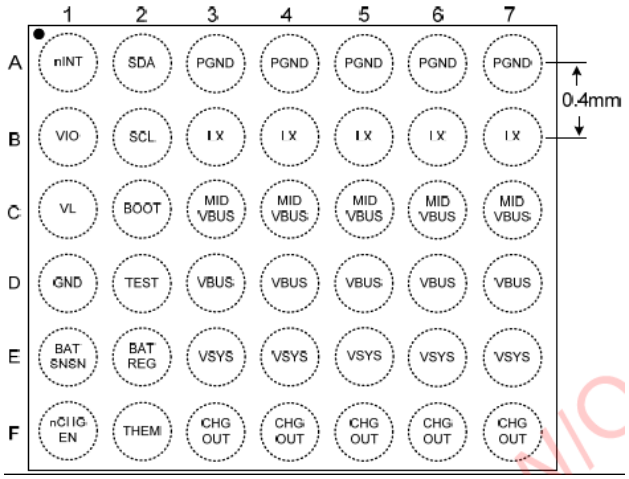	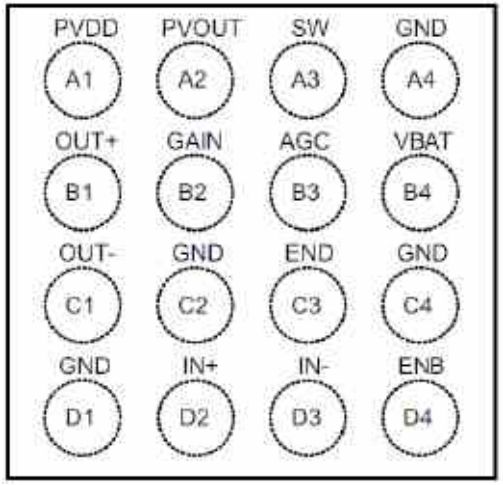

Copyright © 2017 LG Electronics. Inc. All right reserved. Only training and service purposes

LG-M320TV-MAIN_BOT(1)

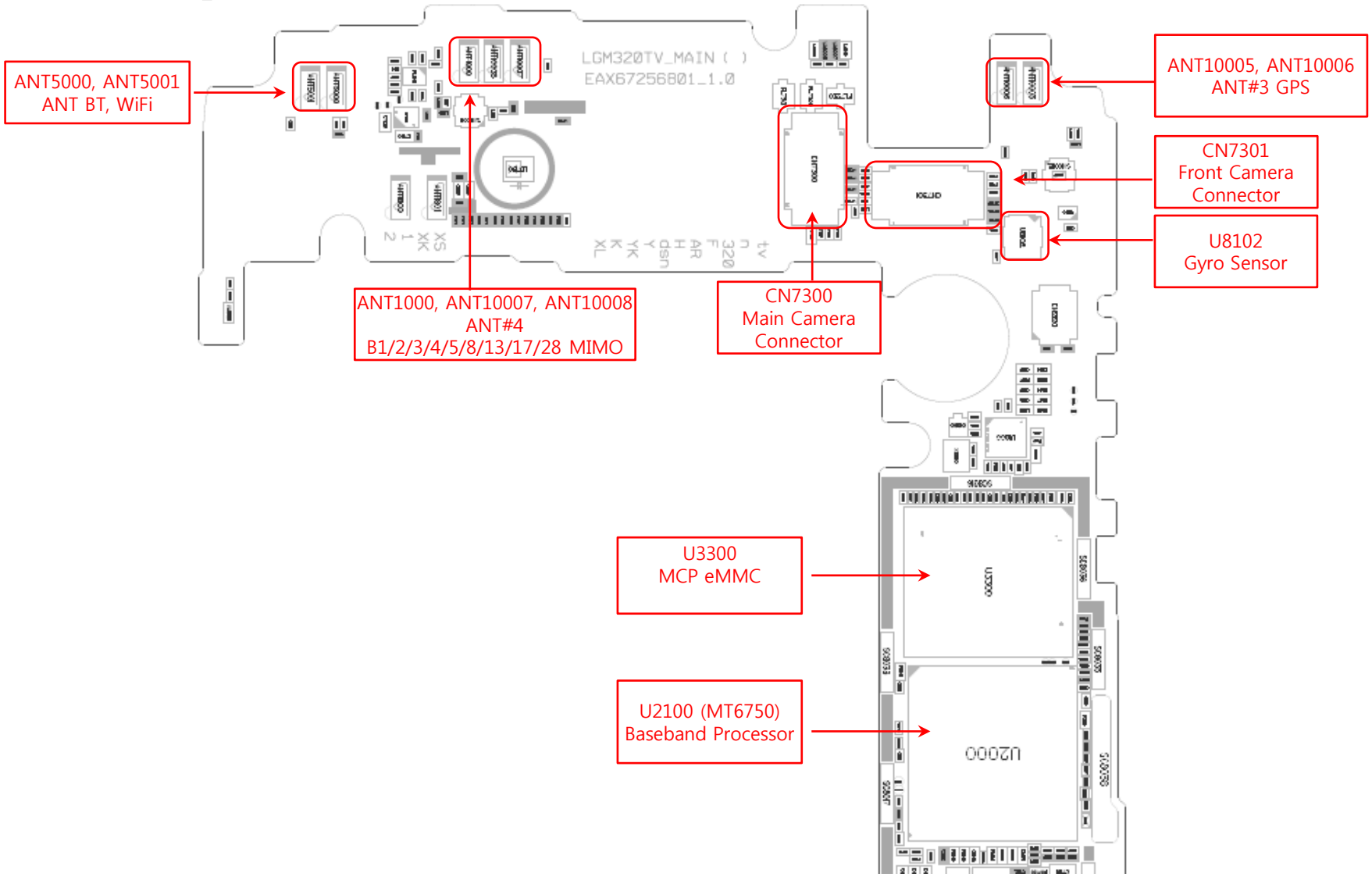

Copyright © 2017 LG Electronics. Inc. All right reserved. Only training and service purposes

LG-M320TV-MAIN_BOT(2)

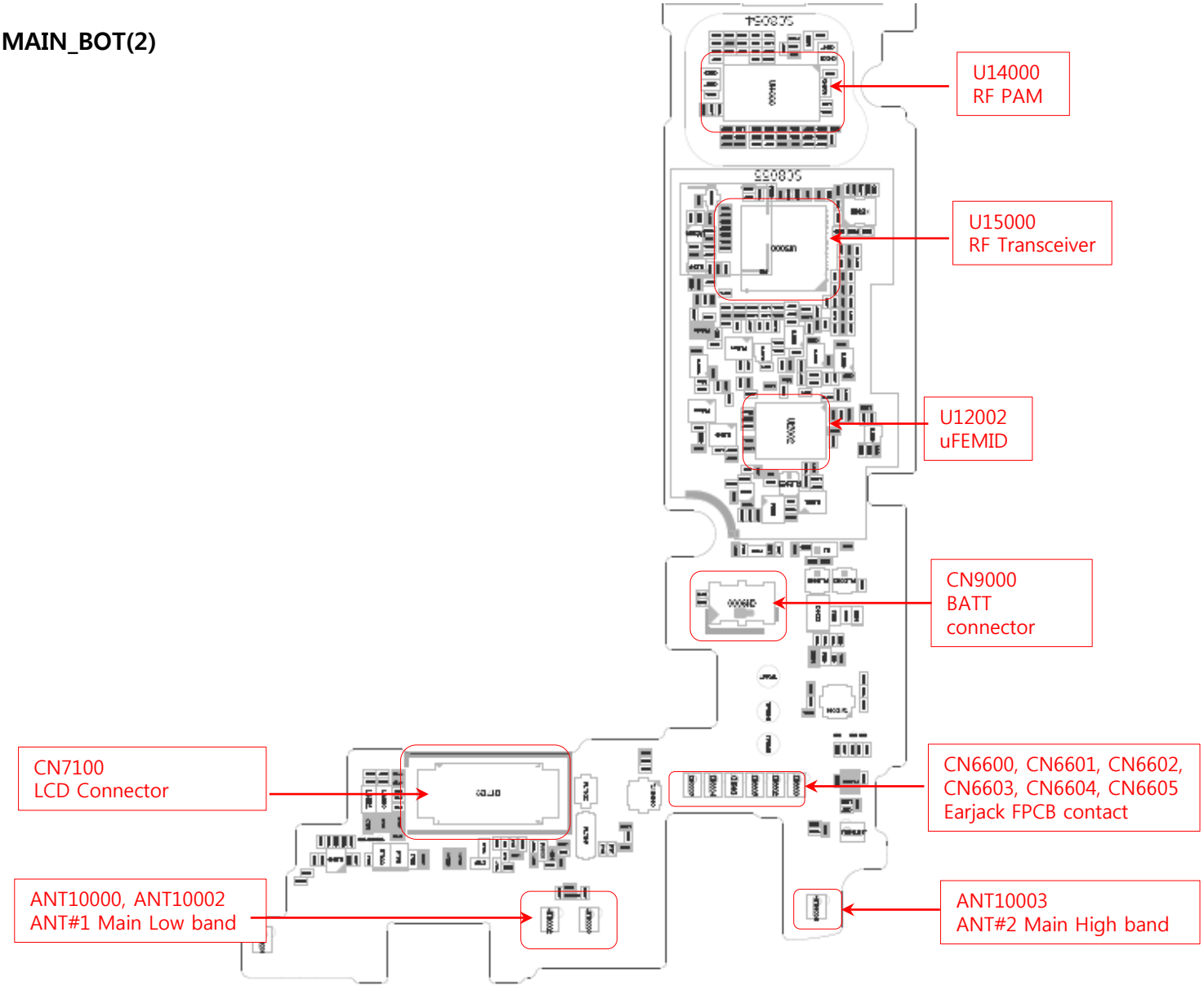

Copyright © 2017 LG Electronics. Inc. All right reserved. Only training and service purposes

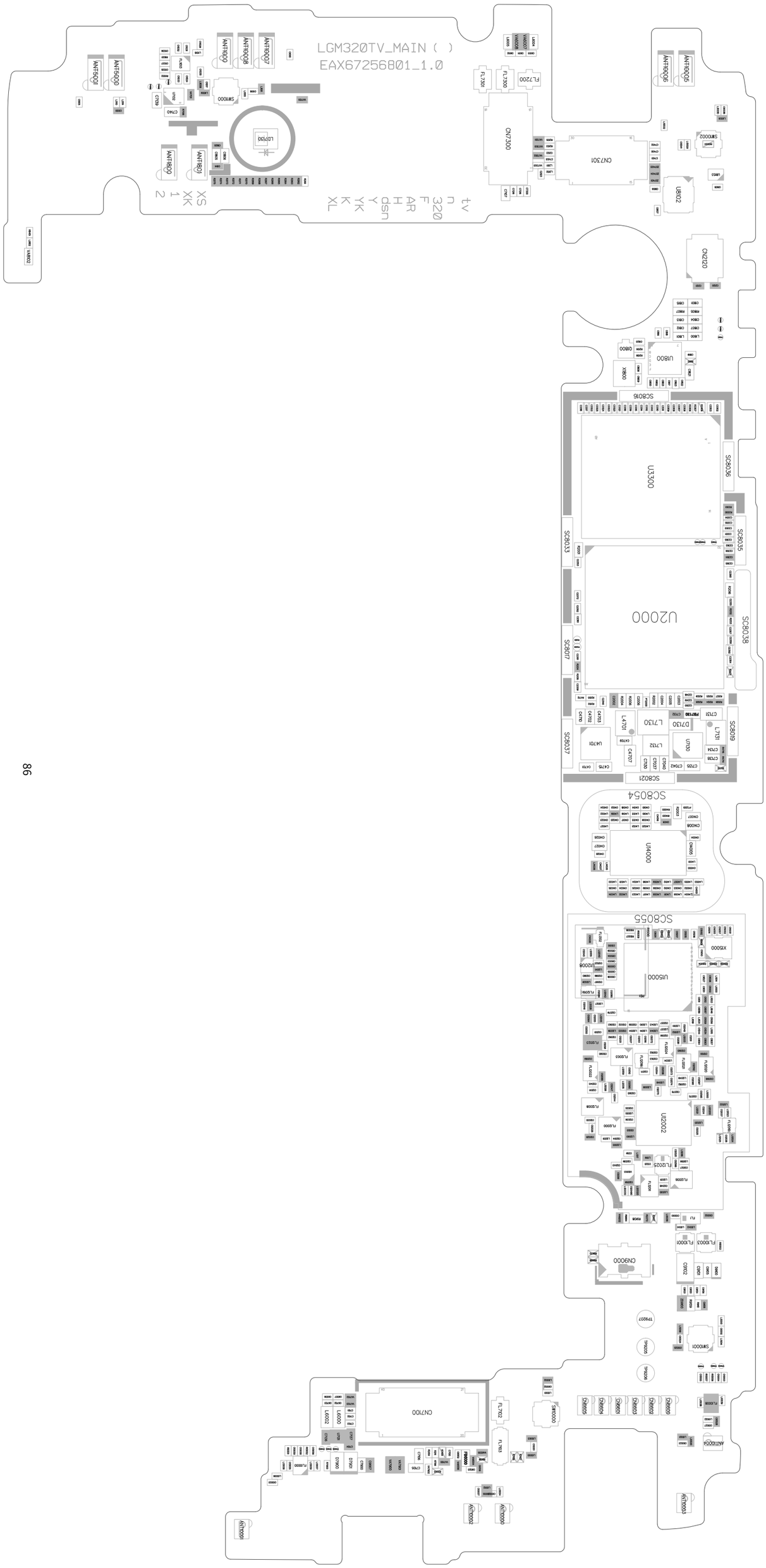
LGM320TV_MAIN ( )
EAX67256801_1.0
tv
n
320
F
AR
H
dsn
Y
YK
K
XL
XS
XK
1
2
U2000
U3300
U4000
U5000
U2002
CN7300
CN7301
CN120
CN9000
CN7100
U8102
U8000
SC8036
SC8035
SC8038
SC8033
SC8077
SC8037
SC8019
SC8021
SC8054
SC8055
SC8016

LG-M320TV-MAIN_TOP(1)

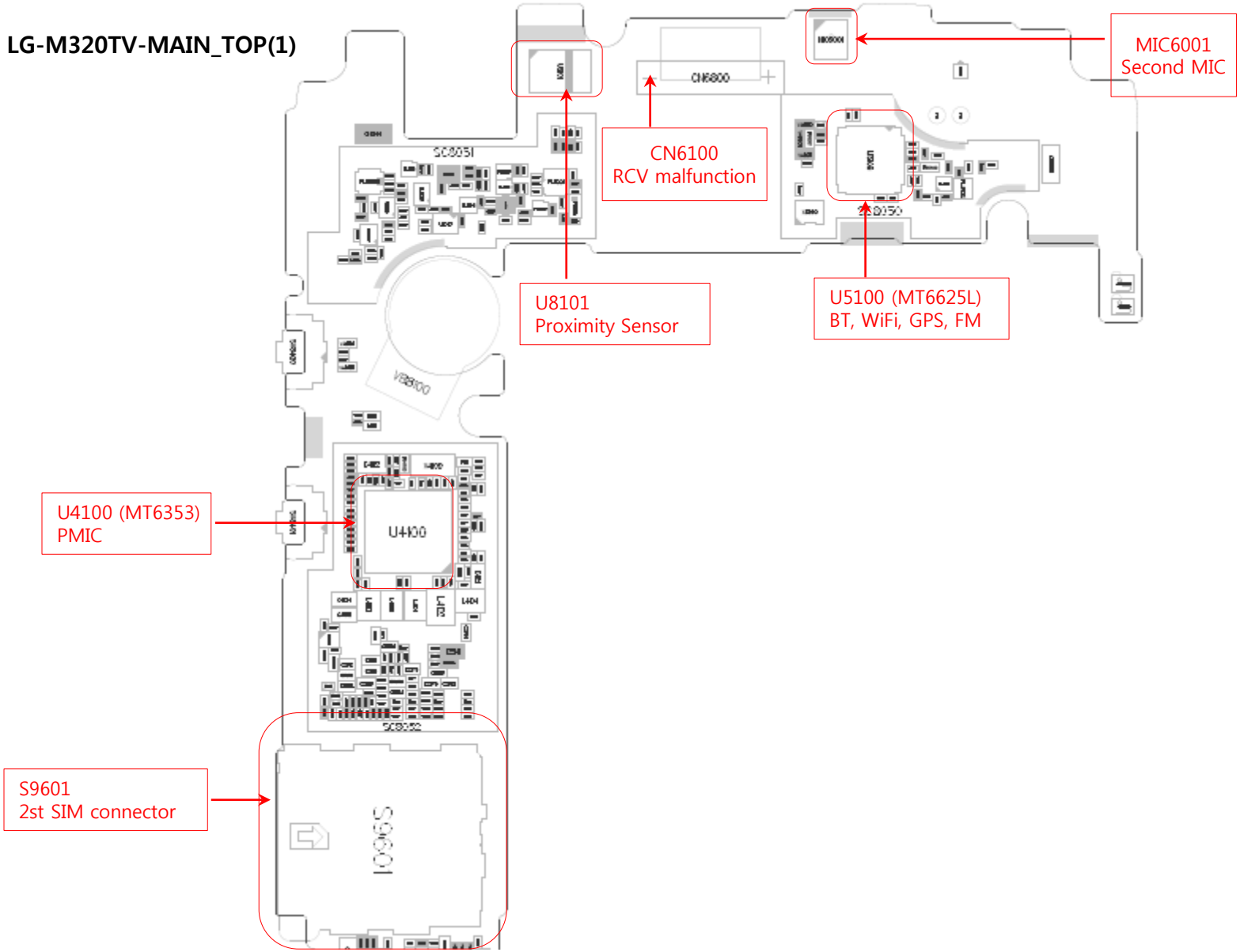

Copyright © 2017 LG Electronics. Inc. All right reserved. Only training and service purposes

LG-M320TV-MAIN_TOP(2)

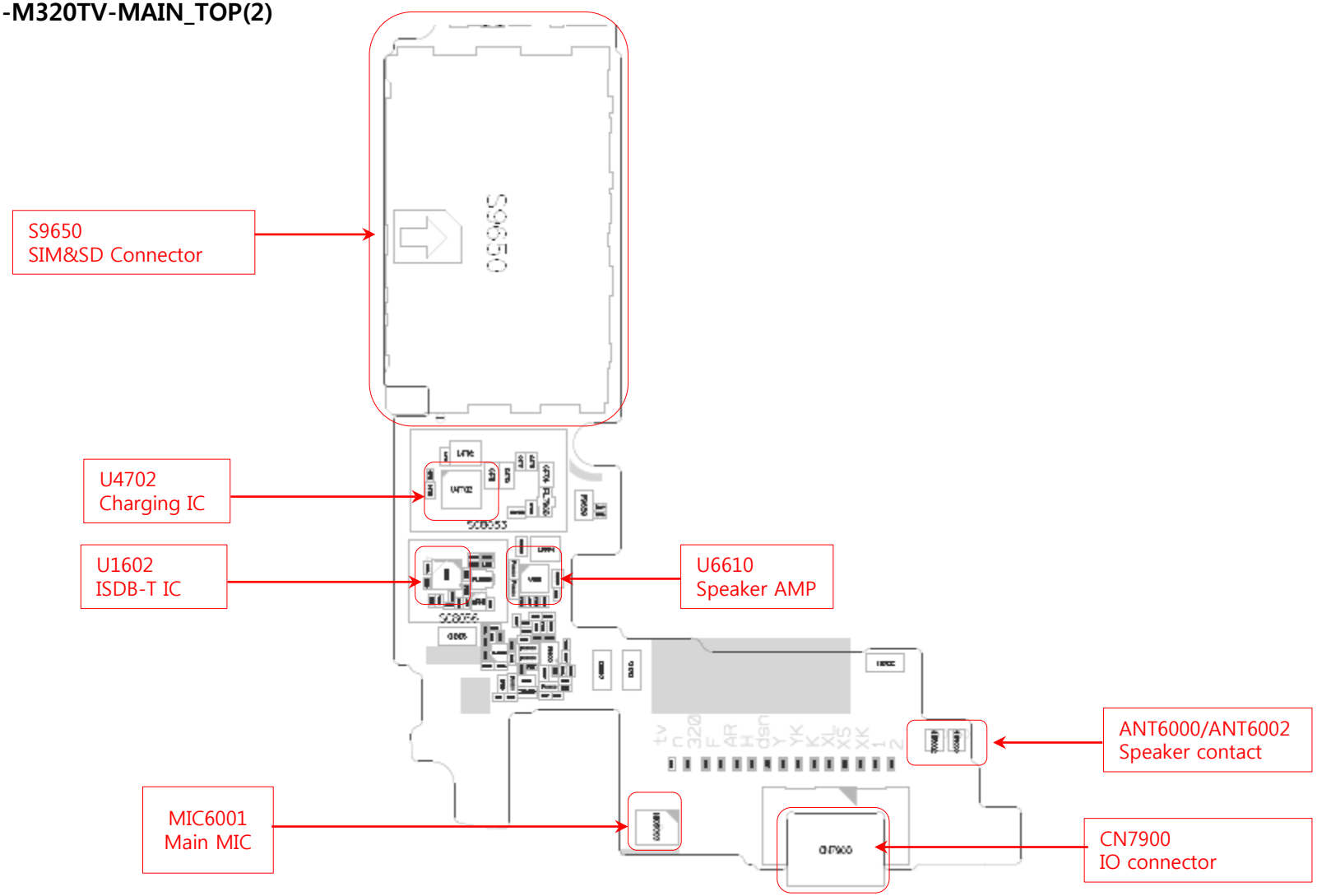

Copyright © 2017 LG Electronics. Inc. All right reserved. Only training and service purposes

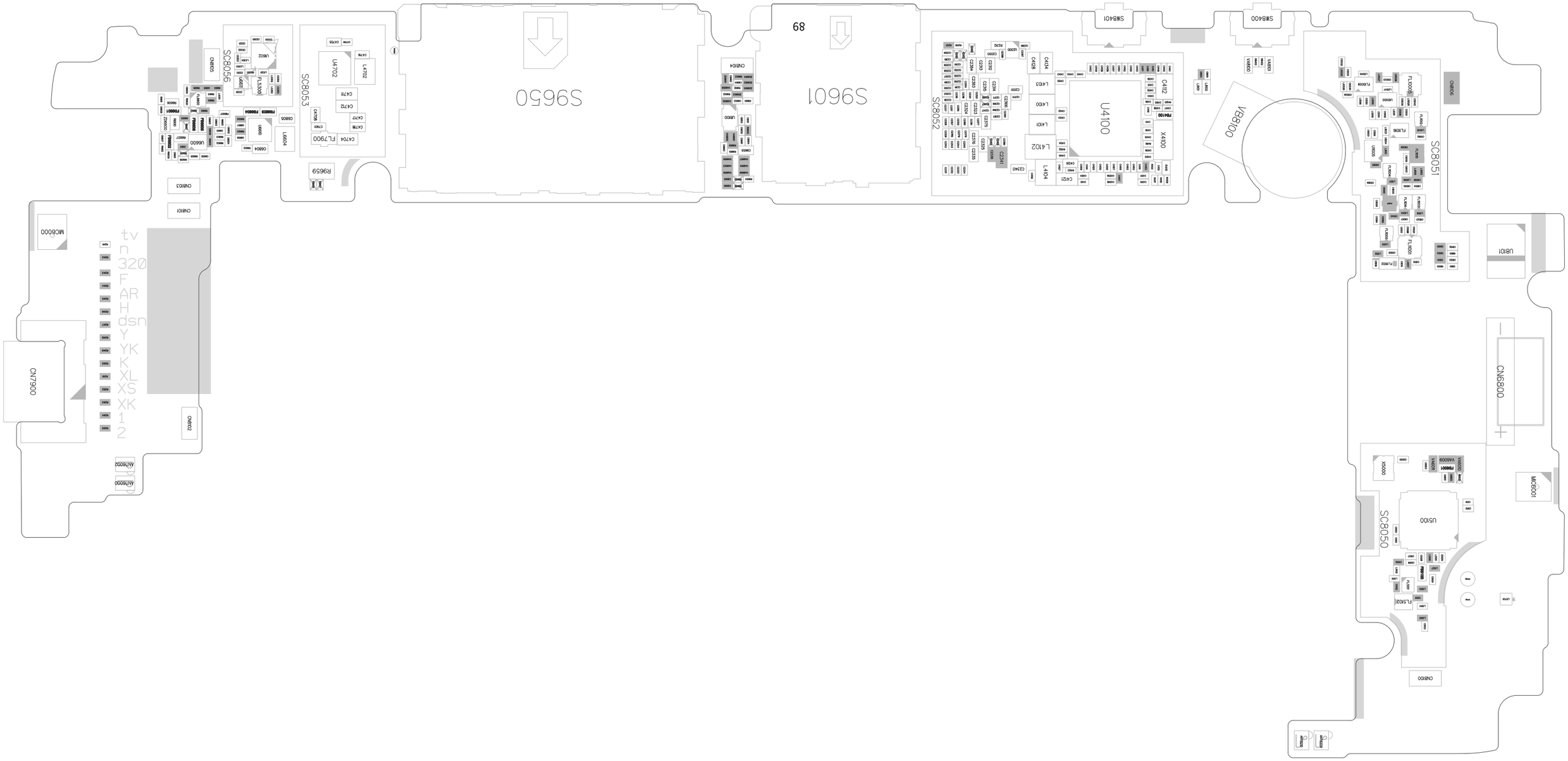
S9650
S9601
SC8052
U4100
X4100
SW8401
SW8400
VB8100
SC8051
CN6806
U8101
CN6800
MC6801
SC8050
U5100
X5000
CN8100
Analogue
Digital
SC8056
CN8505
U8602
SC8053
U4702
L4702
FL7900
R9659
U8600
L6604
CN8103
CN8101
MC6000
tv
n
320
F
AR
H
dsn
Y
YK
K
XL
XS
XK
1
2
CN7900
CN8102
ANT6000
ANT6002

1. Hidden Menu Start

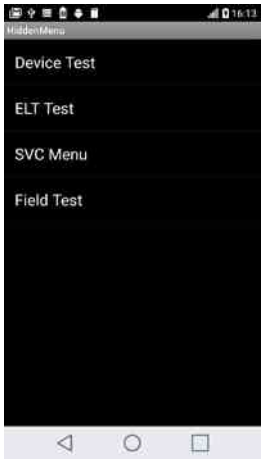

- Start shortcut key:
  *#546368#*320#
- Hidden Menu List
  : Start the desired menu, click

2. Device Test

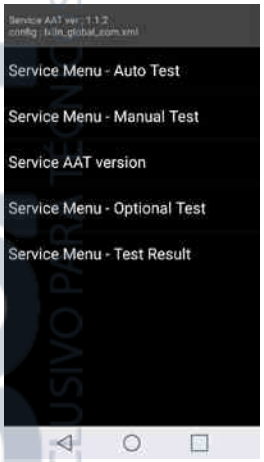

- Service Menu – Auto Test
- Service Menu – Manual Test
- Service AAT version
  → SAAT SW version Display

2. Device Test

- Service Menu – Auto Test
  → All Test Items are continued one after another.
  → Continuous information on the menu, giving you ability test.

3. Device test List

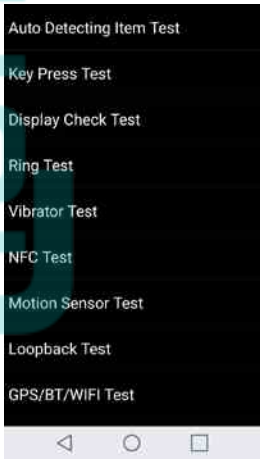

- Service Menu – Manual Test
  → Each test item can be selected and performed by user.

Copyright © 2017 LG Electronics. Inc. All right reserved. Only training and service purposes

1. Auto Detecting Item Test	2. Key Press Test	3. Display Check Test	4. Ring Test
		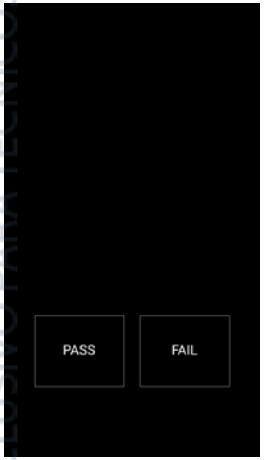	
5. Vibrator Test	**6. Motion Sensor Test**	**7. Loop Back Test**	**8. GPS/BT/WIFI Test**
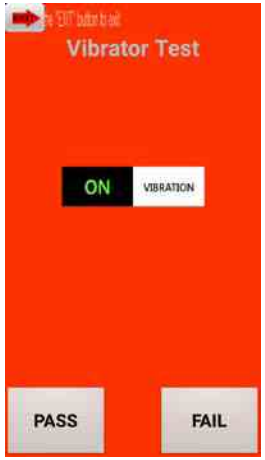		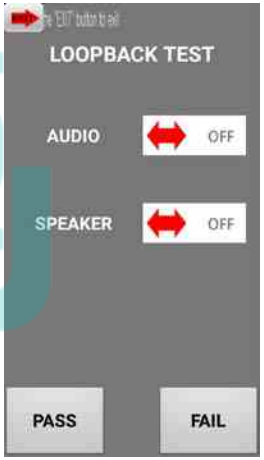	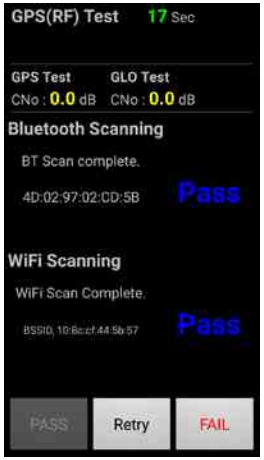

Copyright © 2017 LG Electronics. Inc. All right reserved. Only training and service purposes

9. Touch Draw -Manual	10. Camera(Main) Test	11. Camcorder Test	12. VT Camera Test
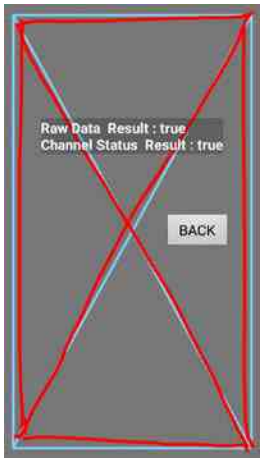	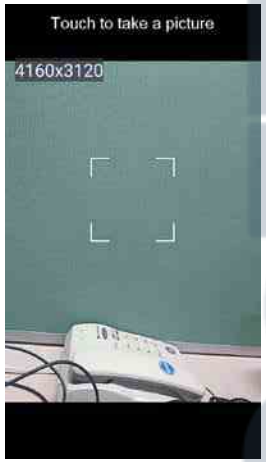		
13. FM Radio Test	**14. OTG Test**	**15. SAAT RESULT**	

LGE Internal Use Only

Copyright © 2017 LG Electronics. Inc. All right reserved. Only training and service purposes

1. Summary

Tool Version	DLL name	USB Driver	
LGFLASH v216	LGM320TV_20170117_LGFLASHv216.dll	LGUnitedMobileDriver_S52MAN314AP22_ML_WHQL_Ver_3.14.1	
Please Check the Version to "LGST ServiceCenter Tool"			
H/W			
	Name	Part No.	SW
D/L Cable	Micro 5P (56-open-910K) USB DLC	RAD32167835	KDZ

2. . USB COM port Setting

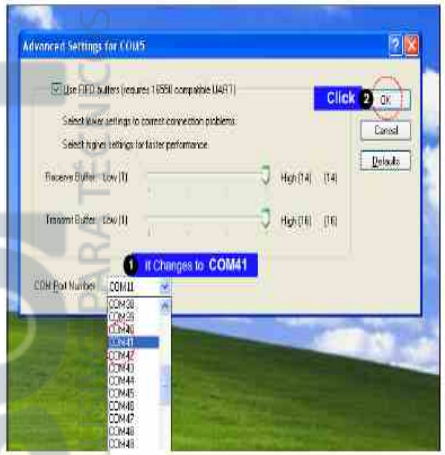

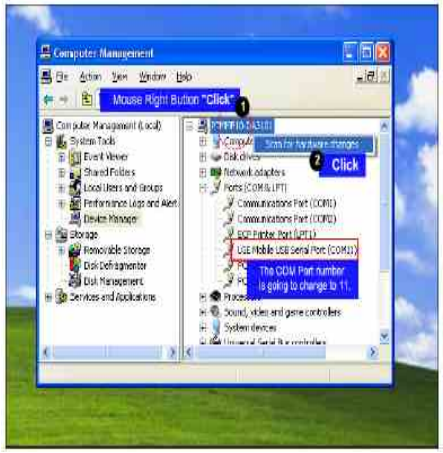

3. USB D/L Cable setting

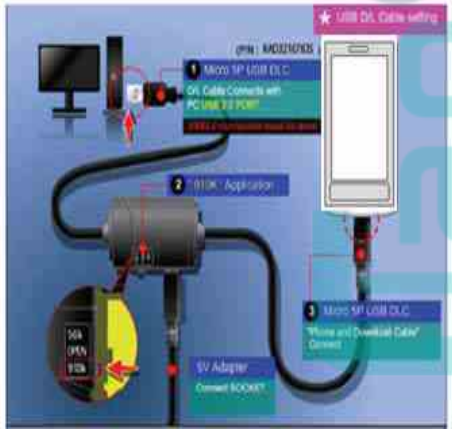

4. Flash tool D/L setting

※ If you want more information, please refer LGST ServiceCenter Tool's Notification"Download User Guide".

Copyright © 2017 LG Electronics. Inc. All right reserved. Only training and service purposes

1. Summary

CAL INFORMATION		
S/W VERSION		
Please Check the Version to "B2B"		
H/W		
	Name	Part No.
PIF	PIF200	BJAY0024021
USB Cable	Micro 5P (56-open-910K) USB DLC	RAD32167835
Power Cable	DC Power Cable	RAD32247878
I/O Cable	5P+SATA Cable(130K)	RAD32847816
RF Cable_Main	MXFJM3WX6000	RAD32827895
Power Supply_PIF		
Power Supply_Phone	Power supply 5.0V	
PF Test Equipment		
Notice	1. Use the Battery (Refer to Attached ppt) 1) Phone states: Power off 2) If do not use the battery, TX fails. 2. Port Setting (Refer to Attached ppt) 1) Uart Port1 : Use the "LGE Mobile USB Serial Port"	
CMW 500 RF Cable connection		

2. . USB COM port Setting

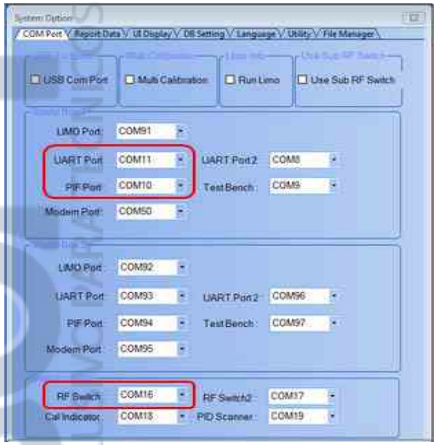

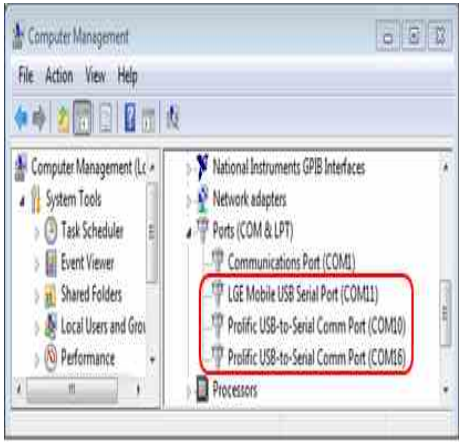

3. Calibration Cable setting

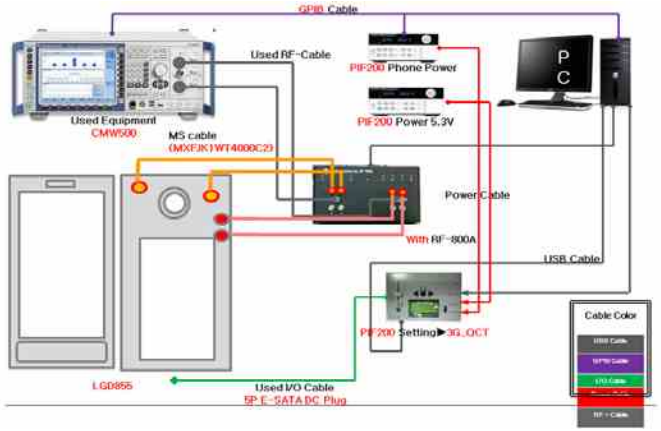

4. Tachyon setting

※ If you want more information, please refer LGST ServiceCenter Tool's Notification "RF Calibration User Guide".

Copyright © 2017 LG Electronics. Inc. All right reserved. Only training and service purposes

▶ Cover Battery

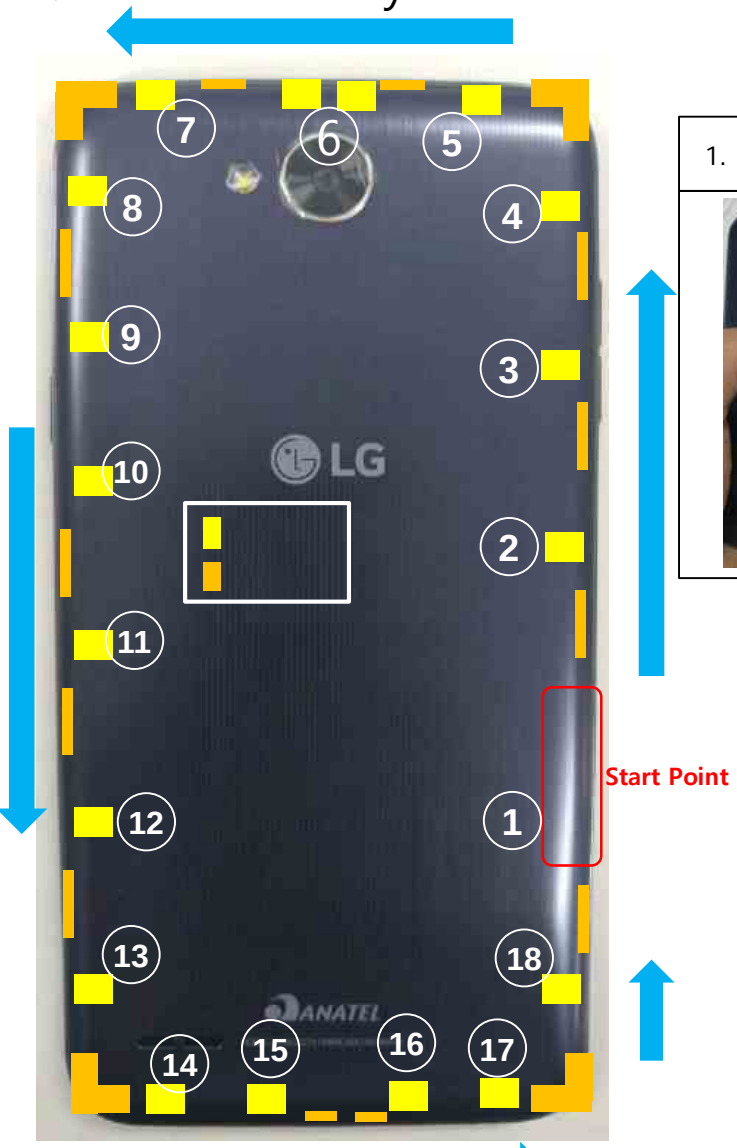

1. SIM TRAY Remove

2. Insert the disassembly tool into the Battery Cover

3. Move the tool and disassemble the hook

5. Disassemble the Same Method

LGE Internal Use Only

Copyright © 2017 LG Electronics. Inc. All right reserved. Only training and service purposes

▶ Cover Rear

2. Insert the disassembly tool into the Rear

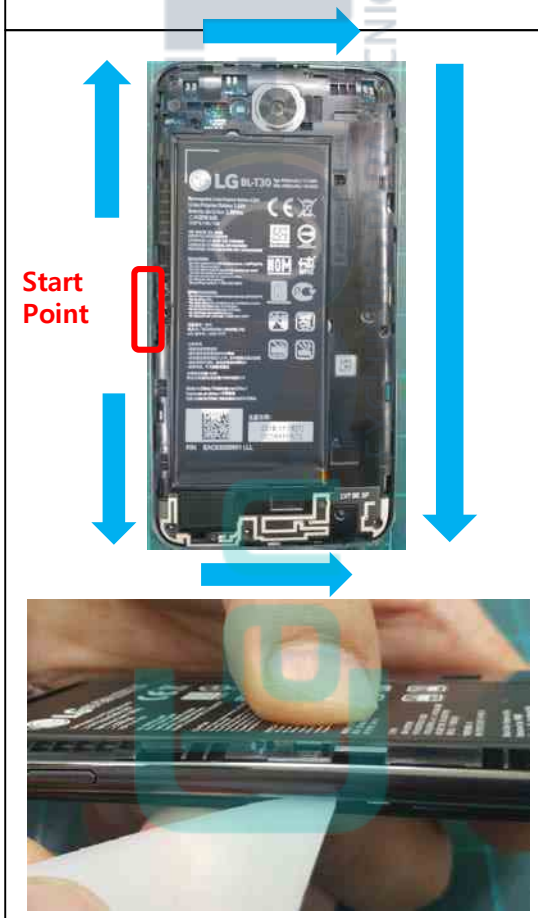

3. Decomposition Complete

Copyright © 2017 LG Electronics. Inc. All right reserved. Only training and service purposes

2. Disassemble The PCB

3 Disassemble The Battery

6. Disassemble Front Camera

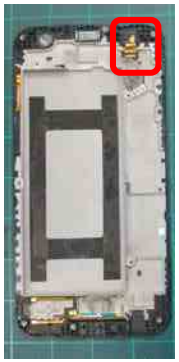

7. Decomposition Complete

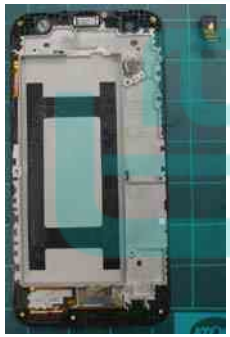

Copyright © 2017 LG Electronics. Inc. All right reserved. Only training and service purposes

12. EXPLODED VIEW

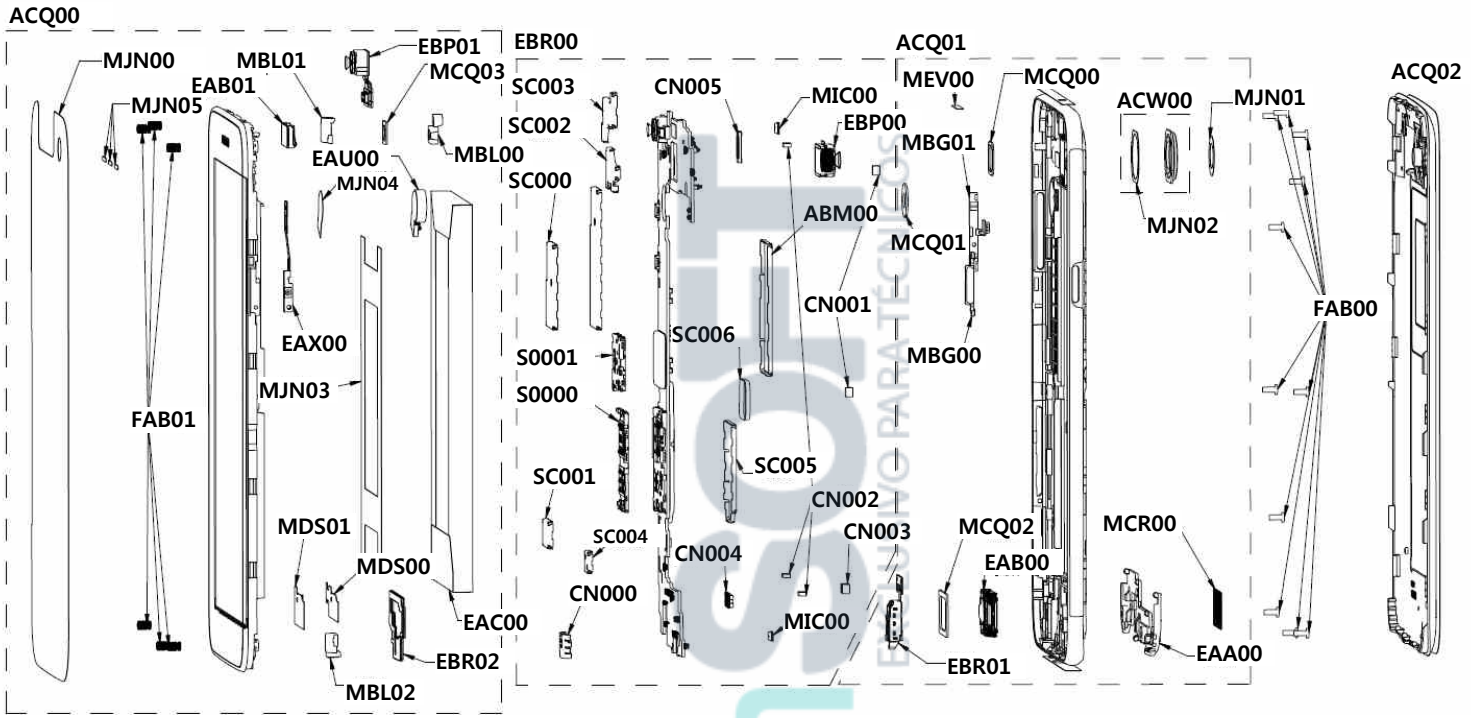

Location no	Description	Location no	Description	Location no	Description	Location no	Description
EBR00	PCB Assembly,Main	CN003	Connector,Terminal Block	MCR00	Decor	MJN05	Tape
ABM00	Can Assembly,Shield	CN004	Connector,BtoB	MEV00	Insulator	EAX00	PCB,Flexible
MIC00	Microphone,Condenser	SC005	Can,Shield	ACW00	Decor Assembly,SVC	MCQ03	Damper,Camera
SC000	Can Assembly,Shield	CN005	Connector,BtoB	MJN02	Tape,Window	MBL00	Cap
SC001	Can Assembly,Shield	SC006	Can,Shield	EAA00	PIFA Antenna,Multiple	MDS00	Gasket
CN000	Connector,I/O	EBP00	Camera Module	EAB00	Speaker,Dual Mode	EAB01	Receiver
CN001	Connector,Terminal	ACQ01	Cover Assembly,Rear(SVC)	EBR01	PCB Assembly,Flexible	EBR02	PCB Assembly,Flexible
CN002	Connector,Terminal	MBG00	Button,Side	ACQ00	Cover Assembly	EAU00	Motor,DC
S0000	Socket,DIMM/SIMM	MBG01	Button,Side	MBL01	Cap	EBP01	Camera Module
S0001	Socket,DIMM/SIMM	MJN01	Tape,Window	MBL02	Cap	MJN00	Tape,Protect
SC002	Can,Shield	MCQ00	Damper,Camera	MJN03	Tape	EAC00	Rechargeable Battery,Lithium Polymer
SC003	Can,Shield	MCQ01	Damper,Camera	MJN04	Tape	FAB01	Screw,Tapping
SC004	Can,Shield	MCQ02	Damper,Camera	MDS01	Gasket	FAB00	Screw,Machine
		ACQ02	Cover Assembly,Battery				

Copyright © 2017 LG Electronics. Inc. All right reserved. Only training and service purposes

No	Part No	Description	Qty	Location No.
1	AGQ89450501	Phone Assembly	1	
2	SAD36251401	Software,Mobile	1	
3	ACQ89574601	Cover Assembly,EMS	1	
4	EBR84199601	PCB Assembly,Main	1	
5	EBR84277901	PCB Assembly,Main,Insert	1	
6	ABM75536051	Can Assembly,Shield	1	
7	MBK64933351	Can Assembly,Shield	1	
8	MEV66111051	Insulator	1	
9	MCQ69106901	Damper	1	
10	EBR84218401	PCB Assembly,Main,SMT	1	
11	EBR83824602	PCB Assembly,Main,SMT Top	1	
12	EAB62950801	Microphone,Condenser	2	
13	ABM75536005	Can Assembly,Shield	1	
14	MBK64933305	Can,Shield	1	
15	MEV66111005	Insulator	1	
16	ABM75536006	Can Assembly,Shield	1	
17	MBK64933306	Can,Shield	1	
18	MEV66111006	Insulator	1	
19	EAE62282201	Capacitor,Ceramic,Chip	2	
20	EAE62286801	Capacitor,Ceramic,Chip	1	
21	EAE62502901	Capacitor,Ceramic,Chip	5	
22	EAE62506501	Capacitor,Ceramic,Chip	1	
23	EAE62685201	Capacitor,Ceramic,Chip	1	
24	EAE62685601	Capacitor,Ceramic,Chip	1	
25	EAE62726601	Capacitor,Ceramic,Chip	3	
26	EAE62762301	Capacitor,Ceramic,Chip	10	
27	EAE62767801	Capacitor,Ceramic,Chip	1	
28	EAX67256801	PCB,Main	1	
29	EAE62946501	Capacitor(High Frequency),Ceramic,Chip	1	
30	EAE63162401	Capacitor,Ceramic,Chip	2	
31	EAE63286601	Capacitor,Ceramic,Chip	5	
32	EAE63621501	Capacitor,Ceramic,Chip	13	
33	EAE64061601	Capacitor,Ceramic,Chip	8	
34	EAE64262401	Capacitor,Ceramic,Chip	1	
35	EAG64149901	Connector,I/O	1	
36	EAG64451601	Connector,Terminal	2	
37	EAG64672301	C-Clip	2	
38	EAG64451501	Connector,Terminal	5	
39	EAG64850401	Socket,DIMM/SIMM	1	
40	EAG64972701	Socket,DIMM/SIMM	1	
41	EAG64973401	C-Clip	2	
42	EAH62033201	Diode,TVS	1	

EXCLUSIVO PARA TÉCNICOS

Copyright © 2017 LG Electronics. Inc. All right reserved. Only training and service purposes

No	Part No	Description	Qty	ocation No.
43	EAM62072101	Filter,Bead	2	FB6603,FB6604
44	EAM62252001	Filter,Bead	1	FB6607
45	EAM62630901	Filter,Bead	1	FB6606
46	EAM62730001	Filter,Separator,Switch	1	FL6600
47	EAM62791701	Filter,Separator	1	FL10005
48	EAM62890601	Filter,Saw	1	FL5300
49	EAM63450501	Filter,Saw,Dual	1	FL11016
50	EAM64030601	Filter,Separator	1	FL11002
51	EAM64112901	Filter,Saw	1	FL11012
52	EAM64230301	Filter,Saw	1	FL5101
53	EAN62578201	IC,Analog Switch	1	U6600
54	EAN62777001	IC,Speaker Amplifier	1	U6610
55	EAN63567401	IC,ISDBT	1	U1602
56	EAN62969801	IC,Hall Effect Switch	1	U8100
57	EAN63106301	IC,RF Amplifier	1	U10000
58	EAN63486501	IC,WiFi	1	U5100
59	EAN63606501	IC,LDO Voltage Regulator	1	U2300
60	EAN63648001	IC,Proximity	1	U8101
61	EAN63788301	IC,RF Amplifier	1	FL10009
62	EAP61866701	Inductor,Multilayer,Chip	1	L5125
63	EAN64294701	IC,PMIC	1	U4100
64	EAN64412601	IC,Charger	1	U4702
65	EAN64426801	IC,RF Amplifier	1	U11005
66	EAP61866601	Inductor,Multilayer,Chip	1	R6620
67	EAP62225901	Inductor,Multilayer,Chip	2	C10033,C11058
68	EAP62108101	Inductor,Multilayer,Chip	2	L10010,L10026
69	EAP62108401	Inductor,Multilayer,Chip	1	L10047
70	EAP62108201	Inductor,Multilayer,Chip	1	L10011
71	EAP62108501	Inductor,Multilayer,Chip	2	L5302,L5309
72	EAP62226601	Inductor,Multilayer,Chip	1	L5303
73	EAP62226501	Inductor,Multilayer,Chip	1	C10040
74	EAP62227101	Inductor,Multilayer,Chip	1	L5102
75	EAP62227301	Inductor,Multilayer,Chip	1	C10015
76	EAP62227701	Inductor,Multilayer,Chip	1	L5101
77	EAP62227501	Inductor,Multilayer,Chip	2	L10016,L10045
78	EAP62266401	Inductor,Multilayer,Chip	1	C11089
79	EAP62526401	Inductor,Multilayer,Chip	1	L11033
80	EAP63067001	Inductor,Multilayer,Chip	1	C11019
81	EAP63106201	Inductor,Wire Wound,Chip	1	L6604
82	EAP63808301	Inductor,Wire Wound,Chip	1	R6610
83	EAP63485901	Inductor,Multilayer,Chip	1	C11082
84	EAP63666401	Inductor,Wire Wound,Chip	1	L4104

EXCLUSIVO PARA TÉCNICOS

Copyright © 2017 LG Electronics. Inc. All right reserved. Only training and service purposes

No	Part No	Description	Qty	Location No.
85	EAP63807801	Inductor,Wire Wound,Chip	4	L4100,L4101,L4103,L4702
86	EAP63826001	Inductor,Wire Wound,Chip	1	L4102
87	EAV63531901	LED,Flash	1	LD7131
88	EAW63143601	Oscillator,TCXO	1	X5000
89	EBC61856101	Resistor,Chip	3	R8101,R9651,R9652
90	ECCH0009102	Capacitor,Ceramic,Chip	3	C6606,C6607,C6608
91	EBC61997701	Resistor,Chip	1	R6600
92	ECCH0009103	Capacitor,Ceramic,Chip	17	C10010,C10013,C10029,C11014,C11015,C11054,C11061,C5101,C5103,C5108,C5111,C6601,C8110, L5104,L5301,L5304,R6613
93	EBC62035901	Resistor,Chip	2	R4122,R4123
94	EBF61974601	Switch,Tact	2	SW8400,SW8401
95	ECCH0009106	Capacitor,Ceramic,Chip	4	C10030,C11053,C2388,C5128
96	ECCH0000182	Capacitor,Ceramic,Chip	1	C2000
97	ECCH0004904	Capacitor,Ceramic,Chip	1	C2001
98	ECCH0009101	Capacitor,Ceramic,Chip	22	C10011,C2337,C2347,C2359,C2368,C2369,C2370,C2371,C2389,C2390,C4105,C4118,C4130,C4132, C5100,C5322,C6803,C6806,C6807,C8100,C8101,C9662
99	ECCH0007805	Capacitor,Ceramic,Chip	1	C2366
100	ECCH0009104	Capacitor,Ceramic,Chip	3	C11084,C6602,C6603
101	ECCH0009208	Capacitor,Ceramic,Chip	1	C5309
102	ECCH0009502	Capacitor,Ceramic,Chip	1	C5303
103	ECCH0009216	Capacitor,Ceramic,Chip	5	C10032,C4110,C4111,C9653,C9661
104	ECZH0025920	Capacitor,Ceramic,Chip	3	C4120,C5350,C6611
105	ECCH0009228	Capacitor,Ceramic,Chip	1	C5109
106	ECCH0009514	Capacitor,Ceramic,Chip	1	C9650
107	ECCH0017301	Capacitor,Ceramic,Chip	59	C2300,C2301,C2302,C2303,C2304,C2305,C2306,C2307,C2308,C2309,C2310,C2311,C2316,C2317, C2318,C2319,C2320,C2321,C2377,C2378,C2379,C2380,C2381,C2382,C2386,C2387,C2391,C4008, C4009,C4010,C4011,C4012,C4013,C4106,C4107,C4108,C4109,C4119,C4131,C4133,C4141,C4144, C4146,C4147,C4148,C4149,C4151,C4152,C4153,C4154,C4156,C4706,C5000,C5110,C5305,C8102, C8103,C9663,C9664
108	ECCH0017501	Capacitor,Ceramic,Chip	2	C4128,C4134
109	ERHY0009501	Resistor,Chip	1	R9669
110	ECCH0017601	Capacitor,Ceramic,Chip	1	C9655
111	ECCH0034801	Capacitor,Ceramic,Chip	12	C2327,C2328,C2329,C2330,C2331,C2332,C2333,C2334,C2342,C2343,C2344,C2345
112	ECCH0042301	Capacitor,Ceramic,Chip	1	C4704
113	ECZH0001215	Capacitor,Ceramic,Chip	1	C4705
114	ECZH0025916	Capacitor,Ceramic,Chip	7	C10014,C10031,C10039,C6610,C6801,C8105,C9654
115	ERHY0000278	Resistor,Chip	1	R2312
116	ERHY0009307	Resistor,Chip	1	R6609
117	ERHY0009503	Resistor,Chip	2	R8402,R8403
118	ERHY0009504	Resistor,Chip	4	R4116,R4121,R6601,R6602
119	ERHY0009505	Resistor,Chip	3	R6611,R6612,R6622

Copyright © 2017 LG Electronics. Inc. All right reserved. Only training and service purposes

No	Part No	Description	Qty	Location No.
120	ERHZ0000401	Resistor,Chip	2	L8100,L8101
121	ERHY0009506	Resistor,Chip	1	R2141
122	ERHY0009507	Resistor,Chip	2	R9612,R9654
123	ERHY0009511	Resistor,Chip	2	R4120,R6603
124	ERHY0009522	Resistor,Chip	1	R4110
125	ERHY0009526	Resistor,Chip	2	R2130,R8100
126	ERHY0009527	Resistor,Chip	1	R6608
127	ERHY0009547	Resistor,Chip	1	R4117
128	ERHY0009559	Resistor,Chip	1	R4108
129	ERHY0035601	Resistor,Chip	1	R9659
130	ERHZ0000270	Resistor,Chip	2	R6606,R6607
131	ERHZ0000279	Resistor,Chip	1	R4111
132	EXXY0018701	Crystal	1	X4100
133	MBK64933301	Can,Shield	1	SC002
134	MBK64933302	Can,Shield	1	SC003
135	SAFP0000401	Wire Pad,Short	15	R2000,R2301,R2302,R2305,R2306,R2307,R2308,R6020,R6604,R6617,R6621,R9655,R9656,R9657, R9658
136	MBK64933307	Can,Shield	1	SC004
137	SAFO0000401	Wire Pad,Open	1	R5300
138	SEVY0005201	Varistor	2	VA8100,VA8101
139	SFBH0008101	Filter,Bead	1	FB5100
140	SFBH0008102	Filter,Bead	4	FB6001,FB6601,FB6602,FB6605
141	SFBH0008106	Filter,Bead	1	FB4100
142	SFEY0015301	Filter,EMI/Power	1	FL7900
143	EBR83825402	PCB Assembly,Main,SMT Bottom	1	EBR071600
144	EAE62282201	Capacitor,Ceramic,Chip	1	C6600,C6609
145	EAE62286801	Capacitor,Ceramic,Chip	1	C4101
146	EAE62502901	Capacitor,Ceramic,Chip	11	C4708,C4717,C4718,C6804,C6805
147	EAE62506201	Capacitor,Ceramic,Chip	2	L14023,L14036
148	EAE62506501	Capacitor,Ceramic,Chip	4	C4126
149	EAE62524201	Capacitor,Ceramic,Chip	1	C14012
150	EAE62685301	Capacitor,Ceramic,Chip	6	C2003,C2004,C2005,C2006,C4701,C7900
151	EAE62726601	Capacitor,Ceramic,Chip	4	C2338,C4113,C4114
152	EAE64061601	Capacitor,Ceramic,Chip	6	C2367,C4104,C4142,C4143,C4145,C4150,C5107,C5321
153	EAP62906001	Inductor,Wire Wound,Chip	2	L6004,L6005
154	EAP62108201	Inductor,Multilayer,Chip	2	L10011
155	ERHZ0000308	Resistor,Chip	1	R9109
156	ECCH0009101	Capacitor,Ceramic,Chip	36	C10011,C2337,C2347,C2359,C2368,C2369,C2370,C2371,C2389,C2390,C4105,C4118,C4130,C4132, C5100,C5322,C6803,C6806,C6807,C8100,C8101,C9662
157	EAP62906101	Inductor,Multilayer,Chip	1	L12004
158	EAP63586501	Inductor,Wire Wound,Chip	2	L4701,L7131

EXCLUSIVA PARA TÉCNICOS

Copyright © 2017 LG Electronics. Inc. All right reserved. Only training and service purposes

No	Part No	Description	Qty	Location No.
159	EAG64973401	C-Clip	11	ANT6000,ANT6002
160	EAH62213401	Diode,TVS	1	D9100
161	ECCH0009504	Capacitor,Ceramic,Chip	1	C12007
162	EAM64072401	Filter,Duplexer	1	FL12011
163	EBG62665701	Thermistor,NTC	2	PT2000,PT2001
164	EAN63807801	IC,RF Amplifier	1	FL12024
165	EAM62291101	Filter,EMI/Power	1	FL7200
166	EAP61866401	Inductor,Multilayer,Chip	1	C14023
167	ERHY0009536	Resistor,Chip	1	R7911
168	EAP62109801	Inductor,Wire Wound,Chip	2	L6000,L6002
169	EBC62595901	Resistor,Chip	1	R15007
170	EAN64187401	IC,Geomagnetic Sensor	1	U8103
171	EAM63730401	Filter,Bead	1	FB7130
172	ECCH0007804	Capacitor,Ceramic,Chip	1	C9105
173	ERHY0009506	Resistor,Chip	5	R2141
174	ECZH0025920	Capacitor,Ceramic,Chip	2	C4120,C5350,C6611
175	ERHZ0000220	Resistor,Chip	1	R2016
176	EAH63092501	Diode,TVS	2	D7900,D7901
177	ERHY0009527	Resistor,Chip	1	R6608
178	ERHY0009311	Resistor,Chip	1	R10003
179	EAT63375201	Module,Rx Module	1	U12002
180	EAM64030501	Filter,Separator	1	FL1
181	EAE64543301	Capacitor,Ceramic,Chip	2	C6006,C6007
182	EAG63412101	Connector,Terminal Block	1	CN003
183	EAE62884201	Capacitor(High Frequency),Ceramic,Chip	1	L14017
184	EAN64345901	IC,Digital Baseband Processor,4G	1	U2000
185	EBC62575901	Resistor,Chip	2	R15008,R15009
186	EAE64383601	Capacitor,Ceramic,Chip	1	C4715
187	ECZH0025917	Capacitor,Ceramic,Chip	1	C9103
188	EAV62991901	LED,Flash	1	LD7130
189	EAE63541901	Capacitor,Ceramic,Chip	1	C7131
190	EAN64261601	IC,MCP,eMMC	1	U3300
191	EAN64086201	IC,RF Transceiver,4G	1	U15000
192	ECCH0017301	Capacitor,Ceramic,Chip	18	C2300,C2301,C2302,C2303,C2304,C2305,C2306,C2307,C2308,C2309,C2310,C2311,C2316,C2317,C2318,C2319,C2320,C2321,C2377,C2378,C2379,C2380,C2381,C2382,C2386,C2387,C2391,C4008,C4009,C4010,C4011,C4012,C4013,C4106,C4107,C4108,C4109,C4119,C4131,C4133,C4141,C4144,C4146,C4147,C4148,C4149,C4151,C4152,C4153,C4154,C4156,C4706,C5000,C5110,C5305,C8102,C8103,C9663,C9664
193	EAE62924001	Capacitor(High Frequency),Ceramic,Chip	2	C7403,VA7303
194	ECZH0001412	Capacitor,Ceramic,Chip	1	C4707
195	EAN64587401	IC,Charger	1	U4701

EXCLUSIVO PARA TÉCNICOS

Copyright © 2017 LG Electronics. Inc. All right reserved. Only training and service purposes

No	Part No	Description	Qty	Location No.
196	EAP62886101	Inductor,Multilayer,Chip	2	L12034,L5110
197	EAP63746801	Inductor,Multilayer,Chip	1	C10002
198	ERHZ0000250	Resistor,Chip	1	R2001
199	ECCH0009105	Capacitor,Ceramic,Chip	3	C7101,C7102,C7103
200	ENBY0036001	Connector,BtoB	1	CN004
201	ECCH0000133	Capacitor,Ceramic,Chip	1	C14007
202	MBK64933353	Can,Shield	1	SC005
203	EAE62946901	Capacitor(High Frequency),Ceramic,Chip	1	C14010
204	MEZ65049701	Label	1	PID1
205	EAE62945901	Capacitor(High Frequency),Ceramic,Chip	2	L14010,L14020
206	EBC61856201	Resistor,Chip	2	R3306,R3307
207	ERHY0000166	Resistor,Chip	2	R2002,R2003
208	SFBH0008102	Filter,Bead	1	FB6001,FB6601,FB6602,FB6605
209	EAG63772101	Connector,RF	4	SW10000,SW10001,SW10002,SW11000
210	ERHY0009519	Resistor,Chip	1	R14001
211	EAM63930301	Filter,Duplexer	1	FL12000
212	EAE64061501	Capacitor,Ceramic,Chip	1	C14028
213	EAN64168101	IC,Gyro Sensor	1	U8102
214	ECA30360101	Coupler,RF Directional	2	FL10001,FL10003
215	ENBY0040701	Connector,BtoB	2	CN005
216	ERHZ0000236	Resistor,Chip	1	R15010
217	ERHY0009543	Resistor,Chip	1	R9664
218	ECZH0001217	Capacitor,Ceramic,Chip	1	C14026
219	MBK64933352	Can,Shield	1	SC006
220	EAH63393501	Diode,TVS	2	C6702,C6703
221	EAP63626601	Inductor,Multilayer,Chip	1	L7132
222	EAN64259501	IC,Power Amplifier	1	U14000
223	EAN64286201	IC,LED Driver	1	U7132
224	ERHZ0000406	Resistor,Chip	1	R2006
225	EAW63183901	Oscillator,VCTCXO	1	X15000
226	ECCH0009228	Capacitor,Ceramic,Chip	1	C5109
227	EAE63143201	Acoustic Noise MLCC	2	C7139,C7140
228	EAE64241501	Acoustic Noise MLCC	2	C14005,C14008
229	ERHZ0000286	Resistor,Chip	1	R9108
230	EAM63050001	Filter,Separator,Switch	1	U12003
231	EAM64030801	Filter,EMI/Power	3	FL7102,FL7300,FL7301
232	EAN64586101	IC,Sub PMIC	1	U7130
233	ERHY0009302	Resistor,Chip	2	C15016,R9110
234	EAH61992701	Diode,Schottky	1	D7130
235	ERHY0009505	Resistor,Chip	1	R6611,R6612,R6622
236	EAF61710001	Varistor	1	VA7902
237	EAE64621501	Capacitor,TA,Polymer	1	C9102

Copyright © 2017 LG Electronics. Inc. All right reserved. Only training and service purposes

No	Part No	Description	Qty	Location No.
238	EAP62546201	Inductor,Multilayer,Chip	2	C12048,C5105
239	EAP61946101	Inductor,Multilayer,Chip	1	C10012
240	EAP63506101	Inductor,Wire Wound,Chip	1	L7130
241	ERHY0009503	Resistor,Chip	1	R8402,R8403
242	EAM63850001	Filter,EMI/Power	1	FL7103
243	ECCH0017601	Capacitor,Ceramic,Chip	1	C9655
244	EAP63066901	Inductor,Multilayer,Chip	2	C14001,L10041
245	EAP61866701	Inductor,Multilayer,Chip	4	L5125
246	EAM63991901	Filter,Separator,Switch	2	FL10000,FL11013
247	EAE62924101	Capacitor(High Frequency),Ceramic,Chip	1	C11032
248	EAE62924201	Capacitor(High Frequency),Ceramic,Chip	1	C12062
249	EAE62945801	Capacitor(High Frequency),Ceramic,Chip	3	L10012,L14013,L14021
250	EAE62946201	Capacitor(High Frequency),Ceramic,Chip	1	C14003
251	EAE62946401	Capacitor(High Frequency),Ceramic,Chip	3	C11031,L14022,L14027
252	EAE62946601	Capacitor(High Frequency),Ceramic,Chip	1	C14034
253	EAE62962201	Capacitor(High Frequency),Ceramic,Chip	3	L14001,L14005,L5114
254	EAE62963801	Capacitor(High Frequency),Ceramic,Chip	1	L10014
255	EAG63652001	C-Clip	7	ANT1000,ANT10005,ANT10006,ANT10007,ANT10008,ANT5000,ANT5001
256	EAM64333001	Filter,Duplexer	1	FL12008
257	EAM64371301	Filter,Duplexer	1	FL12006
258	EAP61747501	Inductor,Multilayer,Chip	2	C14002,L120330
259	EAP61767701	Inductor,Multilayer,Chip	1	C14037
260	EAP61866601	Inductor,Multilayer,Chip	3	R6620
261	EAP61925901	Inductor,Multilayer,Chip	1	C1319
262	EAP62108301	Inductor,Multilayer,Chip	4	C14019,L10008,L12055,L14033
263	EAP62108401	Inductor,Multilayer,Chip	5	L10047
264	EAP62108501	Inductor,Multilayer,Chip	3	L5302,L5309
265	EAP62108801	Inductor,Multilayer,Chip	1	L10042
266	EAP62186301	Inductor,Multilayer,Chip	1	L12051
267	EAP62225901	Inductor,Multilayer,Chip	2	C10033,C11058
268	EAP62226101	Inductor,Multilayer,Chip	1	L10009
269	EAP62226201	Inductor,Multilayer,Chip	7	C11024,C12066,C14013,L10022,L10030,L10032,L14006
270	EAP62226401	Inductor,Multilayer,Chip	2	C12030,L12006
271	EAP62226501	Inductor,Multilayer,Chip	2	C10040
272	EAP62226601	Inductor,Multilayer,Chip	3	L5303
273	EAP62226701	Inductor,Multilayer,Chip	1	L14018
274	EAP62266401	Inductor,Multilayer,Chip	2	C11089
275	EAP62526201	Inductor,Multilayer,Chip	2	L12001,L14012
276	EAP62526401	Inductor,Multilayer,Chip	1	L11033
277	EAP62109001	Inductor,Multilayer,Chip	2	C12025,C12034
278	EAP62886001	Inductor,Multilayer,Chip	1	C14025

EXCLUSIVO PARA TÉCNICOS

Copyright © 2017 LG Electronics. Inc. All right reserved. Only training and service purposes

No	Part No	Description	Qty	Location No.
279	EAP63067001	Inductor,Multilayer,Chip	3	C11019
280	ECCH0009103	Capacitor,Ceramic,Chip	45	C10010,C10013,C10029,C11014,C11015,C11054,C11061,C5101,C5103,C5108,C5111,C6601,C8110,L5104,L5301,L5304,R6613
281	ECCH0009104	Capacitor,Ceramic,Chip	8	C11084,C6602,C6603
282	ECCH0009106	Capacitor,Ceramic,Chip	5	C10030,C11053,C2388,C5128
283	ECCH0009208	Capacitor,Ceramic,Chip	2	C5309
284	ECCH0009216	Capacitor,Ceramic,Chip	3	C10032,C4110,C4111,C9653,C9661
285	ECCH0009502	Capacitor,Ceramic,Chip	1	C5303
286	ECCH0009520	Capacitor,Ceramic,Chip	2	C2122,C2123
287	ECZH0025911	Capacitor,Ceramic,Chip	2	C12027,C14035
288	ECZH0025916	Capacitor,Ceramic,Chip	11	C10014,C10031,C10039,C6610,C6801,C8105,C9654
289	ERHY0009501	Resistor,Chip	2	R9669
290	ERHY0009526	Resistor,Chip	14	R2130,R8100
291	SEVY0005201	Varistor	3	VA8100,VA8101
292	ERHZ0000204	Resistor,Chip	1	R2004
293	MBV62321701	Clip	8	SC8016,SC8017,SC8019,SC8021,SC8033,SC8035,SC8036,SC8037
294	SAFO0000401	Wire Pad,Open	4	R5300
295	SAFP0000401	Wire Pad,Short	15	R2000,R2301,R2302,R2305,R2306,R2307,R2308,R6020,R6604,R6617,R6621,R9655,R9656,R9657,R9658
296	MEZ65049703	Label	0	MEZ000000
297	RAA34548901	Resin,PC	0	RAA050100
298	EBP62981901	Camera Module	1	EBP00
299	ACQ89418311	Cover Assembly,Rear	1	ACQ063300
300	ACQ89397211	Cover Assembly,Rear(SVC)	1	ACQ01
301	MCK69418011	Cover,Rear	1	MCK063300
302	MBG66283802	Button,Side	1	MBG00
303	MBG66247202	Button,Side	1	MBG01
304	MJN70130602	Tape,Window	1	MJN01
305	MCQ68968701	Damper,Camera	1	MCQ00
306	MCQ68968702	Damper,Camera	1	MCQ01
307	MCQ68968703	Damper,Camera	1	MCQ02
308	MJN70267101	Tape,Protect	1	MJN061100
309	MEV66152301	Insulator	1	MEV000000
310	MCR66806402	Decor	1	MCR00
311	MJN70267102	Tape,Protect	1	MJN061101
312	MEV66152302	Insulator	1	MEV00
313	MJN70267113	Tape,Protect	1	MJN061103
314	ACW75537501	Decor Assembly,SVC	1	ACW00
315	ACW75517401	Decor Assembly	1	ACW000000
316	MCR66848101	Decor	1	MCR000000
317	MJN70288601	Tape,Decor	1	MJN020800
318	MKC66279601	Window,Camera	1	MKC009400

Copyright © 2017 LG Electronics. Inc. All right reserved. Only training and service purposes

No	Part No	Description	Qty	Location No.
319	MJN70130601	Tape,Window	1	MJN02
320	MJN70267105	Tape,Protect	1	MJN061100
321	MJN70267104	Tape,Protect	1	MJN061102
322	EAA64568601	PIFA Antenna,Multiple	1	EAA00
323	EAB64448601	Speaker,Dual Mode	1	EAB00
324	EBR83733101	PCB Assembly,Flexible	1	EBR01
325	EBR83745701	PCB Assembly,Flexible,SMT	1	EBR070400
326	EBR83733201	PCB Assembly,Flexible,SMT Top	1	EBR070300
327	EAX67219201	PCB,Flexible	1	EAX010700
328	EBR83761901	PCB Assembly,Flexible,SMT Bottom	1	EBR070200
329	EAG64910801	Jack,Phone	1	J1000
330	EBR83733301	PCB Assembly,Flexible,Insert	1	EBR070100
331	MJN70151401	Tape	1	MJN000000
332	ACQ89418211	Cover Assembly,Bar	1	ACQ003400
333	ACQ89397101	Cover Assembly	1	ACQ00
334	ACQ89359001	Cover Assembly,Front	1	ACQ032700
335	ACQ89389901	Cover Assembly,Front(Sub)	1	ACQ033200
336	MCK69396801	Cover,Front	1	MCK032700
337	MDQ65076901	Frame	1	MDQ000000
338	MICE0016909	Insert,Nut	6	MET099500
339	ACW75437101	Decor Assembly	1	ACW000000
340	MFB64433501	Lens,Flash	1	MFB029600
341	MJN70306901	Tape	1	MJN000000
342	MBL67078001	Cap	1	MBL01
343	MBL67078002	Cap	1	MBL02
344	MHK65825801	Sheet	1	MHK000000
345	MJN70286901	Tape	1	MJN03
346	MJN70286902	Tape	1	MJN04
347	MCQ69104901	Damper	1	MCQ000000
348	MDS65910301	Gasket	1	MDS01
349	MEZ65330701	Label	1	MEZ000000
350	MJN70286903	Tape	1	MJN05
351	MHK65887601	Sheet	1	MHK000002
352	MHK65825802	Sheet	1	MHK000001
353	ACW75397701	Decor Assembly	1	ACW000000
354	MCR66707601	Decor	1	MCR000000
355	MJN70287001	Tape,Decor	1	MJN020800
356	EAT63375401	Module,Hybrid Touch LCD	1	EAT130000
357	EAX67219101	PCB,Flexible	1	EAX00
358	MCQ69084501	Damper,Camera	1	MCQ03
359	MBL67078003	Cap	1	MBL00
360	MDS65970201	Gasket	1	MDS00

Copyright © 2017 LG Electronics. Inc. All right reserved. Only training and service purposes

No	Part No	Description	Qty	Location No.
361	EAB64369201	Receiver	1	EAB01
362	EBR83781001	PCB Assembly,Flexible	1	EBR02
363	EBR83745801	PCB Assembly,Flexible,SMT	1	EBR070400
364	EBR83745901	PCB Assembly,Flexible,SMT Top	1	EBR070300
365	EAX67219301	PCB,Flexible	1	EAX010700
366	EBR83746001	PCB Assembly,Flexible,SMT Bottom	1	EBR070200
367	EBF61955001	Switch,Tact	1	SW1001
368	EBR83733501	PCB Assembly,Flexible,Insert	1	EBR070100
369	MJN70151101	Tape	1	MJN000002
370	EAU63423301	Motor,DC	1	EAU00
371	EBP62982001	Camera Module	1	EBP01
372	MJN70307001	Tape,Protect	1	MJN00
373	MLAZ0038301	Label	1	MEZ000000
374	EAC63458507	Rechargeable Battery,Lithium Polymer	1	EAC00
375	FAB32218901	Screw,Tapping	0	FAB01
376	GMEY0014301	Screw,Machine	11	FAB00
377	ACQ89418411	Cover Assembly,Battery	1	ACQ02
378	MCK69419811	Cover,Battery	1	MCK004100
379	MJN70287102	Tape,Protect	1	MJN061100
380	EAA64529601	PIFA Antenna,GPS	1	EAA030100
381	EAA64568701	PIFA Antenna,WiFi	1	EAA030101
382	EAA64549301	PIFA Antenna,Multiple	1	EAA030102
383	MFB64433401	Lens,Flash	1	MFB029600
384	MEZ66974904	Label	1	MEZ000001
385	MEZ66675301	Label	1	MEZ002100
386	AGF78708701	Package Assembly	1	AGF000000
387	MAY66007619	Box,Master	0	MAY047100
388	MAY66232701	Box,Carton	0	MAY010800
389	MAY66232703	Box,Carton	0	MAY010801
390	MAY66232702	Box,Carton	0	MAY010802
391	MBEC0002901	Box,Carton	0	MAY010803
392	MEZ63874703	Label,Unit Box	2	MEZ084100
393	MEZ64781708	Label,Master Box	0	MEZ047200
394	MEZ65015204	Label,Unit Box	1	MEZ084101
395	MJN68155201	Tape	0	MJN000000
396	MPCY0019330	Pallet	0	MGA000000
397	AAD88213501	Addition Assembly	1	AAD000000
398	EAY64469120	Adapters	1	EAY060000
399	EAB64468401	Earphone,Stereo	1	EAB010200
400	EAD63769701	Cable,Assembly	1	EAD010000
401	MBM65799901	Card,Quick Reference	1	MBM062600
402	AAA76535001	Accessory Assembly	1	AAA000000

Copyright © 2017 LG Electronics. Inc. All right reserved. Only training and service purposes

No	Part No	Description	Qty	Location No.
403	MGJ65068101	Plate	1	MGJ000000
404	MAF63948601	Bag,Vinyl	1	MAF086500
405	MBN64704611	Case	1	MBL063800
406	MBN64704602	Case	1	MBN000001
407	MFL69829801	Manual,Operation	0	MFL053800
408	EBX62208420	Accessory	1	EBX000000
409	MJN70289301	Tape,USP Film	1	MJN107400

LanSOFT EXCLUSIVO PARA TÉCNICOS

Copyright © 2017 LG Electronics. Inc. All right reserved. Only training and service purposes